300PS

G300

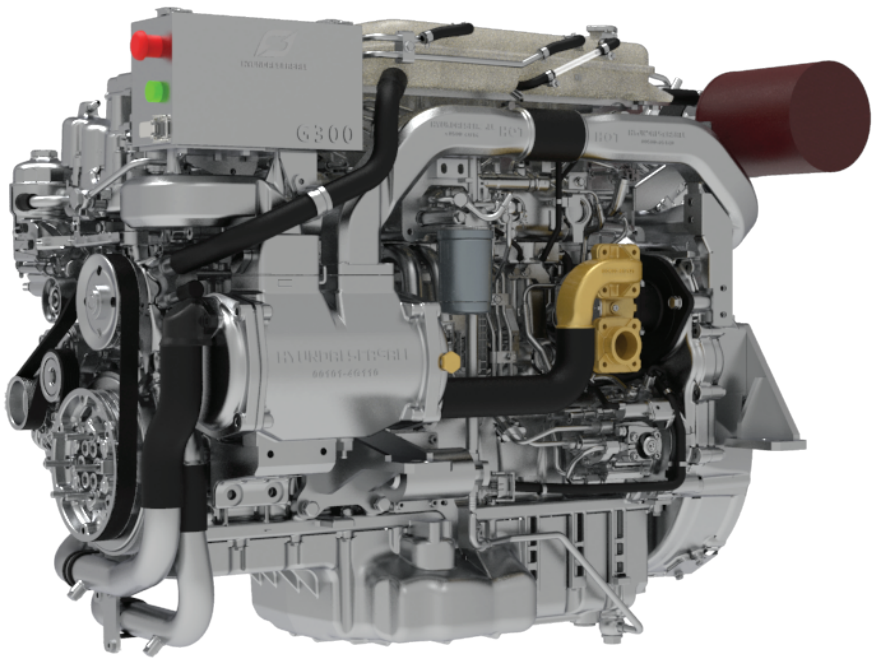

Specifications

Propulsion System	Shaftdrive, Waterjet, Surfacedrive
Engine Duty Rating	Heavy Duty (S1)
Configuration	4–Stroke, 24–Valve DOHC, E–VGT with Intercooler, Water Cooling
Output [PS (kW)]	300 (221)
Rated RPM	2,500
Cylinders	In–line 6
Displacement [cc]	6,798
Bore X Stroke [mm]	107 X 126
Compression Ratio	17.5 : 1
Max. Torque	120.3 kg · m @ 1,600 rpm
Injection System	Common Rail Direct injection (CRDi) – Solenoid Injector
Alternator	24V–90A
Engine Diagnosis	YES
Max Fuel Consump.[l/h]	69.2
Dry Weight [kg]	686
Flywheel	SAE 11–1/2
Flywheel Housing	SAE 2

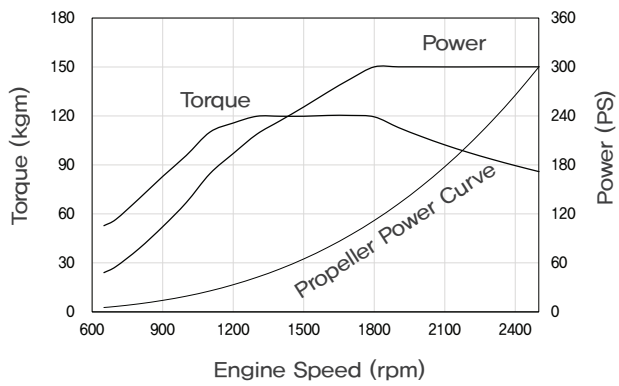

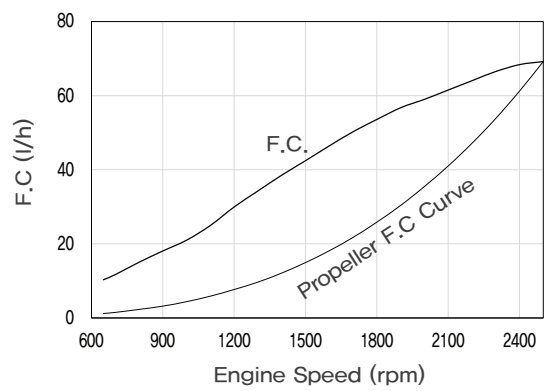

G300

Technical Descriptions

Engine
- 6 cylinder in–line, 24 valve OHC
- Compacted Graphic Iron block and head
- Gallery oil–cooled long lasting mono steel pistons
- Integrated water jacket
- Single serpentine belt system
- Drive belt auto tensioner

Air Inlet system
- Reusable air filter

Fuel System
- Common Rail Direct Injection (CRDI)
  – Solenoid injector with 2,000 bar
- Gear–driven fuel pump
- Electronically controlled injection timing
- Fine fuel filter and water separator

Engine Mounting
- Adjustable engine mounts (Optional)

Electrical System
- 24 volt – 70A alternator
- Auxiliary engine stop button
- Air heating system for a trouble–free cold start
- NMEA2000 Converter (Optional)

Cooling System
- Gear–driven seawater pump
- Seawater–cooled intercooler, heat exchanger
- Auxiliary connector for cabin heating
- Corrosion resistant material for seawater circuit
- Easily accessible seawater impeller pump

Lubrication System
- Easily exchangeable oil filter cartridge
- Integrated oil–cooler in cylinder block
- Closed system with forced feeding
- Eco type oil filter
- Electric oil extraction pump
- Gear drive engine oil pump

Engine Operating Indicator (EOI)
- Engine self–protection and diagnosis
- Displays CAN information
- Displays engine diagnostic error codes
- Audible alarm and control lamps
- Idle & PTO rpm adjustable switch

Exhaust System
- Aluminium exhaust pipe
- E–WGT (Electric Waste Gate Turbocharger)

Emissions
- IMO Tier Ⅱ
- RCD Ⅱ

Dimensions (mm) G300

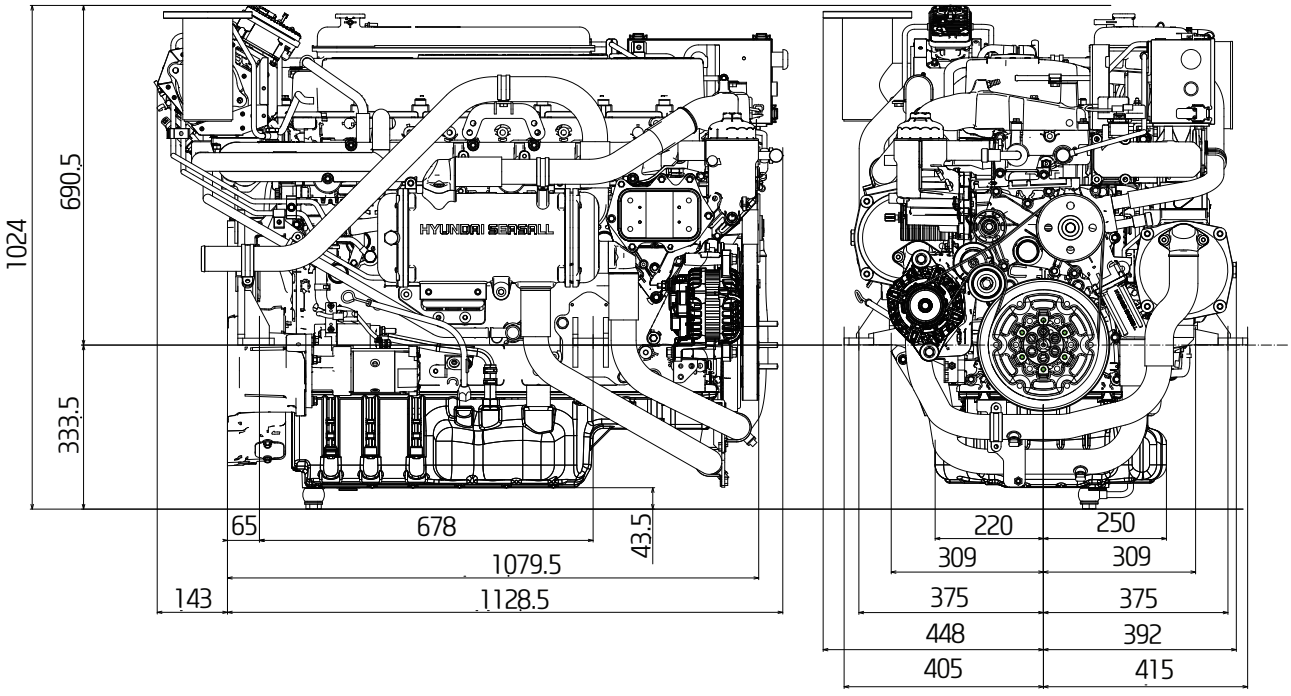

(Homepage) (e–Catalogue)

HYUNDAI SEASALL

124 Jeongoksandan–ro, Seosin–myeon, Hwaseong–si, Gyeonggi–do 18554, Korea

Tel : +82–70–8620–8033 / seasall.info@hyundai–seasall.com