ENGINE INSTRUCTIONS MANUAL

MINI 17, MINI 26, MINI 29
MINI 33, MINI 44, MINI 55

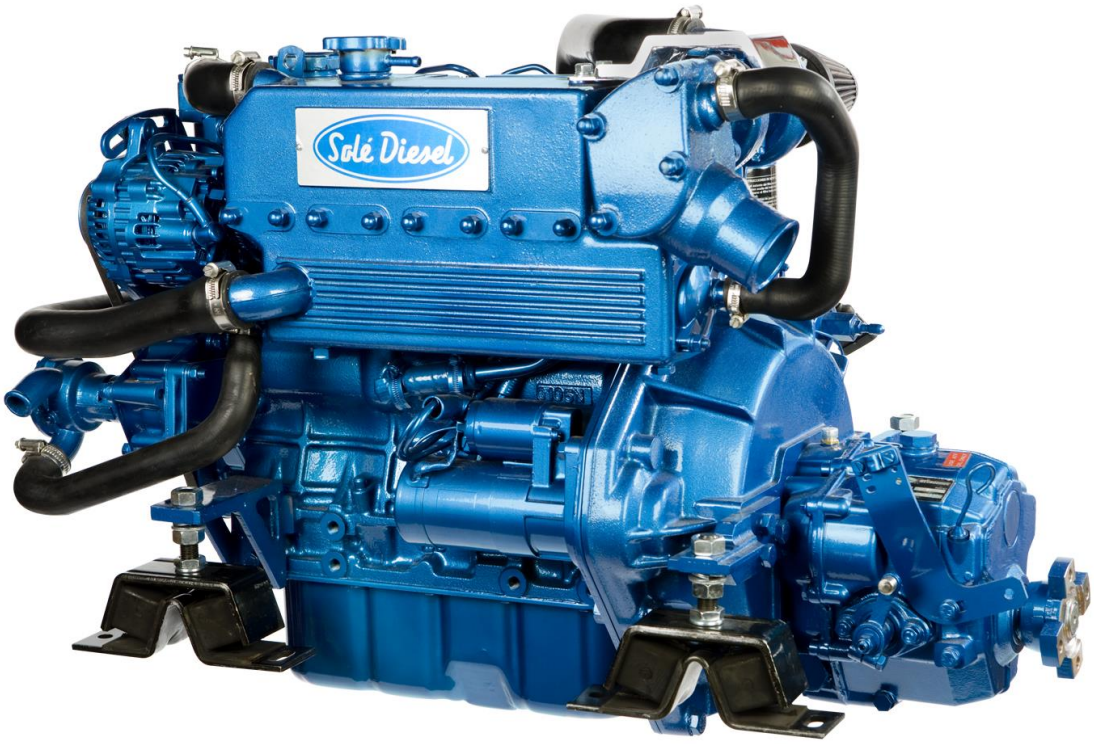

Solé Diesel
MARINE DIESEL ENGINES

CE

CONTENTS

0. INTRODUCTION ENG-1
0.0 FOREWORD
0.1 USING THE INSTRUCTION MANUAL
0.1.1 IMPORTANCE OF THE MANUAL
0.1.2 CONSERVING THE MANUAL
0.1.3 CONSULTING THE MANUAL
0.1.4 SYMBOLS IN THE MANUAL ENG-2

1. GENRAL INFORMATION ENG-3
1.1 ENGINE MANUFACTURER'S INDENTIFICATION DATA
1.2 INFORMATION REGARDING TECHNICAL ASSISTANCE / MAINTENANCE OF THE ENGINE
1.3 GENRAL SAFETY NOTICIES
1.3.1 INFORMATION REGARDING RESIDUAL RISKS ENG-4
1.3.2 SAFETY REGULATIONS

2. PRELIMINARY INFORMATION ON THE ENGINE ENG-5
2.1 GENERAL DESCRIPTION
2.2 COOLING CIRCUIT
2.2.1 COOLING CIRCUIT
2.2.2 "SEAWATER" COOLING CIRCUIT ENG-6
2.3 LUBRICATION CIRCUIT
2.3.1 ENGINE
2.3.2 GEARBOX
2.4 FUEL CIRCUIT
2.4.1 INJECTION PUMP ENG-7
2.5 ELECTRICAL PLANT
2.5.1 ELECTRICAL PLANT AND INTRUMENT PANEL TE
2.5.2 ELECTRICAL PLANT AND INTRUMENT PANEL SVT
2.6 TECHNICAL SPECIFICATIONS ENG-9
2.6.1 ENGINE DIMENSIONS ENG-10
2.7 GEARBOX, GENERAL INFORMATION ENG-15

3. TRANSPORT, HANDLING AND STORAGE ENG-16
3.0 GENERAL WARINGS
3.1 PACKING AND UNPAKING
3.1.1 PACKING AND UNPAKING WITH PALLET AND WOODEN CRATE
3.1.2 PACKING AND UNPAKING WITH PALLET AND SKELETON CRAT
3.1.3 PAKING AND UNPAKING WITH ENGINE MOUNTING FIXTURE AND PLASTIC PACKAGIN
3.2 RECEIPT
3.2.1 PACKING LIST ENG-17
3.3 TRANSPORT AND HANLING THE PACKED ENGINE
3.4 TRANSPORT AND HANDLING OF THE UNPACHED ENGINE
3.5 STORAGE OF PACKED AND UNPACKED ENGINE

4. INSTALATION ENG-18
4.0 GENERAL WARINGS
4.1 ASSEMBLY DATA
4.2 ENGINE SUPPLIES ENG-19
4.2.1 CHANGING OIL
4.2.1.1 CHANGING ENGINE SUMP OIL
4.2.1.2 CHANGING GEARBOX OIL
4.2.2 FILLING THE COOLING CIRCUIT ENG-20
4.2.3 REFUELING ENG-21
4.3 INSTALLATION
4.4 INDICATIONS FOR REMOVAL / DISPOSAL OF WASTE MATERIAL

CONTENTS

5. PREPARING THE ENGINE FOR USE ENG-22
5.0 GENERAL WARINGS
5.1 INSTRUCTIONS FOR FIRST STARTING
5.1.1 BLEEDING AIR FROM THE FUEL SUPPLY SYSTEM ENG-23
5.2 PRELIMINARY RUNNING TEST
5.2.1 NO-LOAD RUNNING TEST
5.2.2 RUNNING – IN

6. USING THE ENGINE ENG-24
6.0 GENERAL WARINGS
6.1.STARTING THE ENGINE
6.2. STOPPING THE ENGINE ENG-25
6.3 USING THE ENGINE INFREQUENTLY
6.4 OPERATING THE ENGINE AT LOW TEMPERATURES
6.5 CONSERVATION ENG-26
6.6 LONG INACTIVITY INSTRUCTIONS
6.7 RESTORATION OF THE RUNNING CONDITIONS

7. REPAIR AND MAINTENANCE ENG-27
7.0 GENERAL WARNINGS
7.1 TYPE AND FREQUENCY OF INSPECTIONS AND MAINTENANCE INTERVENTIONS
7.2 OPERATION DESCRIPTION ENG-29
7.3 TROUBLE SHOOTINGS ENG-34

8. ADDITIONAL INSTRUCTIONS ENG-35
8.0 ADDITIONAL INSTRUCTIONS
8.1 ISNTRUCTIONS FOR DECOMMISSIONING, SCRAPPING AND DISPOSAL
8.2 DERATING OF ENGINE DUE TO FUEL AND COMBUSTIO PROPERTIES

9. SOLÉ DIESEL WARRANTY ENG-37
9.0 SOLÉ DIESEL LIMITED WARRANTY
9.1 SOLÉ DIESEL EXTENDED WARRANTY
9.2 RESTRICTIONS
9.3 RESPONSIBILITIES ENG-38
9.4 AFTER-SALES SERVICE CONTACT
SERVICE ASSISTANCE ENG-39

10. TECHNICAL ANNEXES ENG-40
10.0 OIL SPECIFICATIONS
10.1 ENGINE OIL TO BE USED
10.0.2 GEARBOX OIL
10.1 ESPECIFICATIONS FOR ENGINE INSTALLATION
10.2 OIL DISSTICK MODIFICACION WHEN THE ENGNE IS FITTED INCLINED ENG-41
10.3 FUEL INJECTION TIMIMG

11. INSPECTION PRIOR TO THE DELIVERY OF PROPULSION ENGINES ENG-42

12. MAINTENANCE LOG ENG-44

0. INTRODUCTION

0.0 FOREWORD

Dear client:

The SOLÉ S.A. engine you have purchased is a product of the highest technological quality Our Service SOLÉ DIESEL department has recently been strengthened to ensure even better service for all our clients. Reliable duty and long life of the engine you have purchased can only be guaranteed if exclusively original spare parts are used, and ensure that the unit is serviced by our specialized personnel.

We therefore recommend that you insist on having your SOLE S.A. engine serviced EXCLUSIVELY by our Service SOLÉ DIESEL Department. If engines manufactured by SOLÉ S.A. are serviced by unauthorised technicians, or if non-original spare parts are utilized, ALL GUARANTEE AND TECHNICALASSISTANCE OBLIGATIONS OF SOLÉ S.A. WILL BE INVALIDATED.

We are confident that you will understand the importance of these recommendations, which are made for purely technical reasons and serve to defend our clients and ensure their full satisfaction with our products.

Please get in touch with us for any requirements you may have. Best regards.

0.1 USING THE INSTRUCTION MANUAL

0.1.1 IMPORTANCE OF THE MANUAL

This INSTRUCTION MANUAL is your guide to the USE and MAINTENANCE of the engine you have just purchased. We strongly recommend that you follow all the advice in the manual meticulously, because the correct operation and lasting reliability of the engine depend on its correct use and the methodical application of the programmed maintenance operations illustrated in these pages.

If you run into difficulties or setbacks, Service SOLÉDIESEL department will be proud to provide you with the necessary advice and assistance.

This INSTRUCTION MANUAL is and integral part of the product you have acquired. Please conserve it in a safe place for the full working life of the engine.

SOLÉ S.A. reserves the right to make changes aimed at improving its products without any form of prior notification. Please ensure that you enclose with the original publication of the present manual any amendments or updates that you may receive.

Pass on this manual to all users of the engine or future owners.

0.1.2 CONSERVING THE MANUAL

When using the manual make sure that it is not damaged or defaced. Do not remove or rewrite any parts of the manual for any reason. Conserve the manual in a dry and heat protected place.

0.1.3 CONSULTING THE MANUAL

This instruction manual comprises:

· COVER PAGE WITH INDICATION OF THE FAMILY TO WHICH YOUR ENGINE BELONGS. The cover page shows the model of the engine described in the manual.
· TABLE OF CONTENTS. Use the contents page to find the page containing information relative to a given argument.
· INSTRUCTIONS AND/OR NOTES ABOUT THE PRODUCT. All the INSTRUCTIONS AND/OR NOTES ON THE PRODUCT are designed to define safety practices, proper procedures and the skills required for correct operation of the engine.

The annexes at the end of this manual are an integral part of the same. Please note that the illustrations in the manual, which have been included to help you identify the parts described in the text, show standard or prototype engines and may therefore differ, in some respects, from the engine in your possession.

0.1.4 SYMBOLS IN THE MANUAL

The Safety symbols and notices shown below are used throughout this publication to draw the user's attention to situations or hazardous procedures that could damage the engine or cause personal injury, and to indicate suitable practices to assure the correct operation of the engine.

☞ GENERAL OPERATIONAL NOTE

PROTECT YOUR HANDS (GLOVES)

Prescription-Indication notices (rectangular); it is obligatory to adopt the protective measures shown in the notices to perform the operation in question in total safety:

PROTECT YOUR EYES (SAFETY GLASSES)

PROTECT RESPIRATORY PASSAGES (MASK)

DANGER!, (GENERAL DANGERSITUATION FOR THE SAFETY OF ANYONE AND PROTECTION OF THE ENGINE)

Danger Warning-Attention Notices (triangular); General Attention regarding personal safety and protection of the engine:.

DANGER!, (DANGER OFELECTRICAL DISCHARGES FORTHE SAFETY OF PERSONS AND ENGINE)

DANGER!, (DANGER FROM SOURCES OF HEAT FOR THE SAFETY OF ANYONE AND THE ENGINE)

THE OPERATION INDICATED IN THE TEXT IS STRICTLYPROHIBITED

Prohibition notices (circular) indicating potentially hazardous situations for personal safety:

IT IS ABSOLUTELY PROHIBITED TO PERFORMMAINTENANCE WORK IN THE PRESENCE OF MOVING PARTS

REMOVING OR TAMPERING WITH SAFETY DEVICES ISSTRICTLY PROHIBITED

☞ PAY ATTENTION TO SYMBOLS AND OBSERVE THE INSTRUCTIONS IN THE ADJACENT TEXT

1. GENERAL INFORMATION

1.1 ENGINE MANUFACTURER'S IDENTIFICATION DATA

MANUFACTURER:

SOLÉ, S.A.
Ctra. de Martorell a Gelida, km 2
08760 MARTORELL
(BARCELONA) SPAIN

MODEL:

_____

TRADE DESIGNATION:

MINI-17
MINI-26
MINI-29
MINI-33
MINI-44
MINI-55

_____

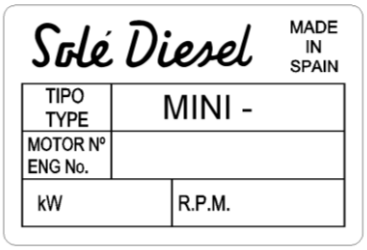

Fig. 1.1

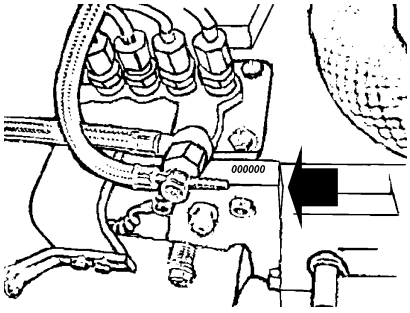

Fig. 1.2

The above data can be quickly identified in the following position:
- Engine nameplate showing identification data (see Fig. 1.1)
- Markings stamped on the engine showing serial number (see Fig. 1.2)

1.2 INFORMATION REGARDING TECHNICAL ASSISTANCE / MAINTENANCE OF THE ENGINE

Our after sale service is at your complete disposal to solve any problems that may arise or to supply any information you may need. For ANY explanations refer to the "SERVICE SOLÉDIESEL" address booklet.

Optimal operation and efficiency of your new SOLÉDIESEL engine can only be guaranteed if original spare parts are used.

For "GUARANTEE" terms refer to the "GUARANTEE CARD".

1.3 GENERAL SAFETY NOTICES

The engine is designed and built as a power unit for generating mechanical energy: ALL USES OTHERTHAN THE PRESCRIBED APPLICATIONAUTOMATICALLY RELEASE SOLÉ S.A. FROMLIABILITY FOR DAMAGES THAT MAY ENSUE, in any event, the use of products other than those agreed upon at the time of purchase, RELEASES SOLÉ S.A.FROM ALL LIABILITY FOR DAMAGE TO THEENGINE OR PROPERTY OR INJURY TO PERSONS.

Although the engine is built in compliance with the most recent safety standards it is advisable to bear in mind that moving parts are always potentially dangerous. Therefore, never attempt to work on parts of the engine while they are in motion and make sure that there are no persons in the vicinity of the engine before starting it.

The standard engine can run at ambient temperatures between -18 ºC a +45 ºC.

The operator in charge of installing and maintaining the engine must wear suitable CLOTHING for the workplace and the situation; in particular, avoid loose clothes, chains, bracelets, rings and all other accessories that could become entangled with moving parts..

The area in which the operator is working must be kept tidy and free of oil and other liquid spillages and solid waste (metal chips, etc.).

Before starting work the operator must be aware of the position and operation of all commands and the characteristics of the engine; make a daily check of the safety devices on the engine. Disabling or tampering with the safety devices on the engine is strictly prohibited. Do not attempt to perform maintenance work adjustments or reset tings on moving parts on the engine; before performing any of the above operations disconnect the electrical supply to ensure that no other persons can start the engine up in the meantime.

Do not alter any parts of the engine (for example connections, holes, finishes, etc.) to adapt it to the installation of extra equipment or for any other reason; THE RESPONSIBILITY FOR ANY TYPE OFINTERVENTION NOT EXPRESSLY AUTHORISEDIN WRITING BY SOLÉ S.A. BELONGS TO THE ONE WHO DEVELOPES SUCH WORK.

SOLÉ S.A. DECLARES THAT THE ENGINE CHARACTERISTICS ARE COMMENSURATE WITH THE PARAMETERS PERMITED BY ESTABLISHED LAW REGULATIONS REGARDING THE EMISSION OF:

- AIRBONE NOISE
- POLLUTING EXHAUST GAS

WHEN USING THE MOTOR IN A CLOSEDENVIRONMENT THE EXHAUST FUMES MUST BECONVEYED OUTSIDE..

1.3.1 INFORMATION REGARDING RESIDUAL RISKS

The engine must be used in compliance with the manufacturer's prescriptions (technical specifications, safety regulations, etc.). Any modifications you make be previously authorized by the Manufacturer. If you use the engine beyond its application limits and alter in any way the characteristics that are the responsibility of SOLÉ S.A., such use shall be considered improper and SOLÉ S.A. declines all liability for the consequences (see notes regarding intended use in General Safety Notices 1.3).

DO NOT TAMPER WITH OR MODIFY ANY MECHANICALOR ELECTRICAL COMPONENTS OF THE ENGINE WITHOUT PIOR WRITTEN AUTHORISATION FROM THE MANUFACTURER

1.3.2 SAFETY REGULATIONS

IT'S STRICTLY PROHIBITED TO PERFORM MAINTENANCE WORK WHILE THERE ARE ENGINE PARTS MOVING.

IT'S STRICTLY PROHIBITED TO REMOVE OR TAMPER WITH THE SAFETY DEVICES

WHEN THE ENGINE IS RUNNING IT IS STRICTLYPROHIBITED TO TOUCH ANY PART OF IT

ALWAYS PROTECT THE HANDS WITH SAFETYGLOVES AND HEATRESISTANT CLOTHING WHEN WORKING ON A HOT ENGINE

PROTECT THE RESPIRATORY PASSAGES WHEN WORKING IN THE VICINITY OF ENGINE EXHAUST GAS

2. PRELIMINARY INFORMATION ON THE ENGINE

2.1 GENERAL DESCRIPTION

Direction of rotation: clockwise observing engine from side opposite flywheel.

Timing: pushrod and rocker arm with gear driven camshaft in crankcase.

Air supply: air cleaning by means of a dry-type air filter. For MINI-55 engine, air supplied by turbocharger.

Fuel system:

(a) mechanical priming pump equiped with membrane, fitted on RONIM-V and SMI-R2 and SMI-R3 gearbox.
(b) electric priming pump, for the rest of gearbox used.

Combustion system: Swirl chamber (Mini 17 - 26 – 29- 33- 44 -55).

Cycle: diesel 4 stroke.

Cooling: liquid cooled circulation controlled by centrifugal pump with thermostatic control and heat exchanger. Cooled exhaust collector.

Injection pump: BOSCH type.

Lubrication: forced-feed lubrication by gear-pump(Mini 17 – 26 - 29). Forced-feed lubrication by trochoid pump (Mini 33 – 44 – 55).

Electrical system: 12V.

Alternator 40A (Mini 17 - 26 – 29). Alternator 50A (Mini 33 – 44 - 55).

2.2 COOLING CIRCUIT

2.2.1 "FRESHWATER" COOLING CIRCUIT (Fig. 2.1)

⚠ use anti-freeze coolant liquid as indicated in section 4.2.2 of this manual

1) Water pump
2) Water cooler
3) Thermostat
4) Bypass pipe
5) Boiler connections (Optional)

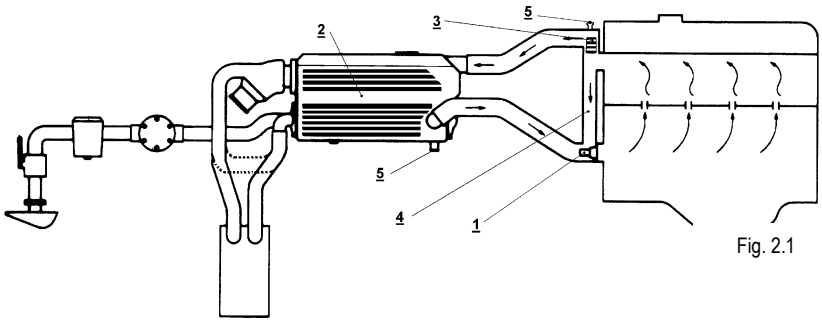

Fig. 2.1

Thermostat valve operating values:

	MINI-17-26-29		MINI-33-44-55
Start opening	+71 ºC		+76,5 ºC
End opening	+90 ºC		+90 ºC

	CIRCUIT CAPACITY (LIT.)
MINI-17	3.00
MINI-26	3.5
MINI-29	3.5
MINI-33	6.25
MINI-44	8.00

	CIRCUIT CAPACITY (LIT.)
MINI-55	9.00

2.2.2 “SEAWATER” COOLING CIRCUIT (Fig. 2.2)

0) Bottom cock
1) Intake connection with water filter
2) Water pump
3) Water / Water cooler
4) Wet exhaust elbow
5) Gear box cooler (ONLY SMI-R2 GEARBOX)

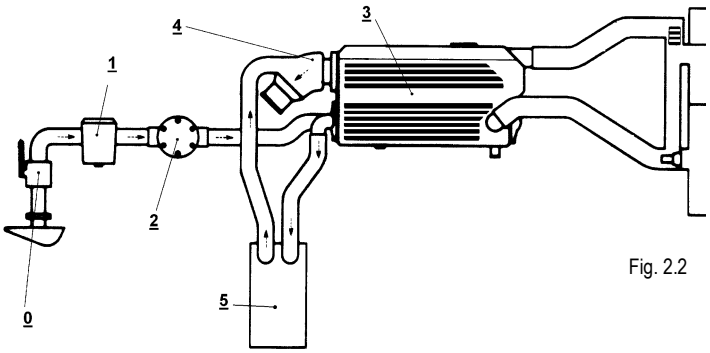

Fig. 2.2

2.3 LUBRICATION CIRCUIT

2.3.1 ENGINE

Lubrication is forced with a lobe pumpand total filtration of the oil pumped tothe various lube points on the engine.The oil is forced by the pump through acontrol valve to the filter, the enginemain bearings and, by way of external pipelines, to the rocker arms. Also, read the heading 9.2.

Oil circuit pressure (with hot engine):

min / 800 rpm = 0.5 kg/cm^2
máx / 3000-3600 rpm = 3 - 4 kg/cm^2

ENGINE TYPE:	CIRCUIT CAPACITY(1)
MINI 17	2.4 liters
MINI 26	3,60 liters
MINI-29	3.60 liters
MINI 33	4.20 liters
MINI 44/55	6.0 liters

(1) Total Oil capacity. Inclouiding 0.5 liter for the oil filter

(1) Main gallery
(2) Oil pump
(3) Oil filter
(4) Oil pressure switch
(5) Oil strainer
(6) Drain plug

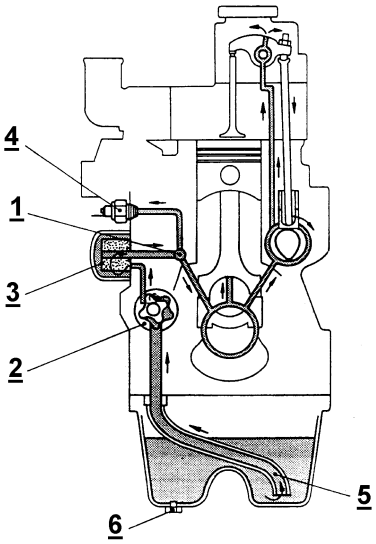

2.3.2 GEARBOX

Gearbox has its own lubrication,independent from the engine.
Read its Service Manual.

2.4 FUEL CIRCUIT

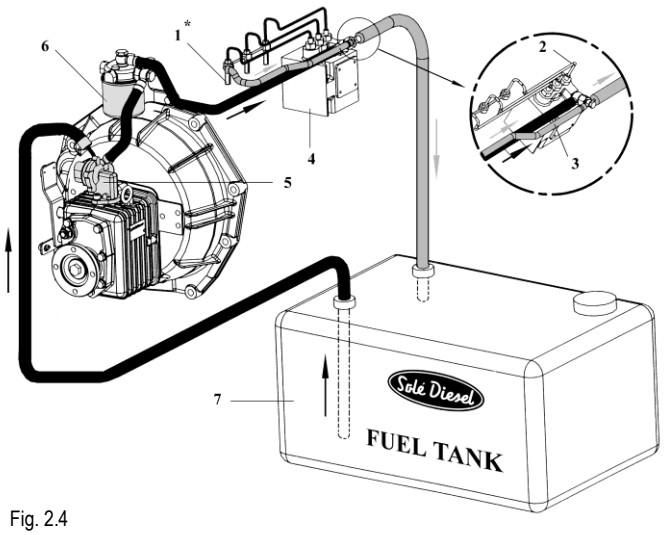

Fig. 2.4

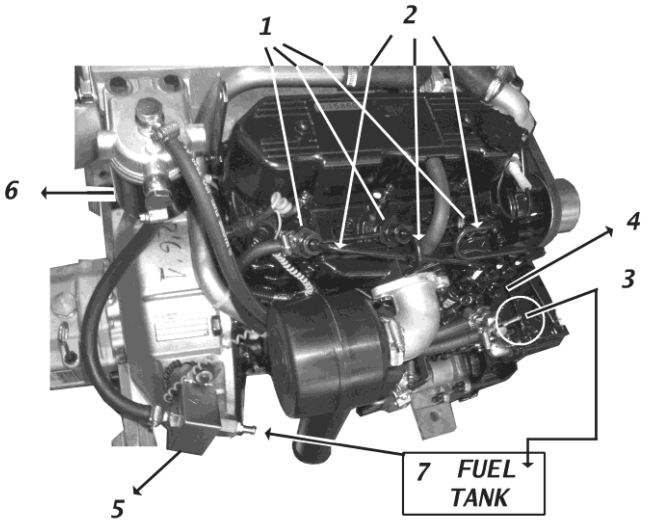

Fig. 2.4A

(1) Fuel injection nozzle

Model	Quantity
MINI-17	2
MINI-26/29/33	3
MINI-44/55	4

(2) Fuel injection pipe
(3) Fuel leak - off pipe
(4) Injection pump
(5) Priming pump. See the picture 2.4 for engines equiped with mechanical priming puma (Ronim-V and SMI-R2 and SMI-R3 gerarboxes). See the picture 2.4A for engines equipped with an electrical priming pump.
(6) Fuel filter
(7) Tank

2.4.1 INJECTION PUMP

Circuit pressure: (0.3/0.4 bar)

2.5 ELECTRICAL PLANT

2.5.1. ELECTRICAL PLANT AND INSTRUMENT PANEL TE

	DESCRIPTION
A	GLOW PLUG OPERATION LAMP
B	BATTERY CHARGE LAMP
C	WATER TEMP.ALARM LAMP
D	OIL PRESSURE ALARM
E	STARTER
F	TACHOMETRE
G	COOLANT TEMP. GAUGE
H	FUSE
I	FUSE
J	BUZZER
K	HOUR COUNTER

ENGINE	Part. No.
MINI-17/26/29	609.38.125
MINI-33/44/55	609.72.125

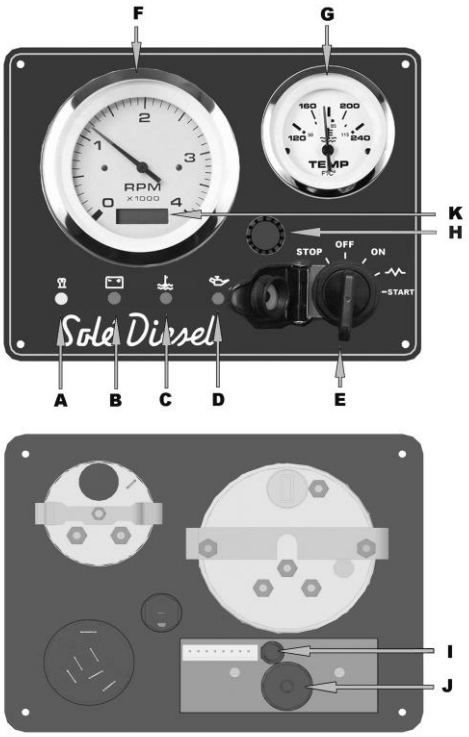

Standard Panel (12V)

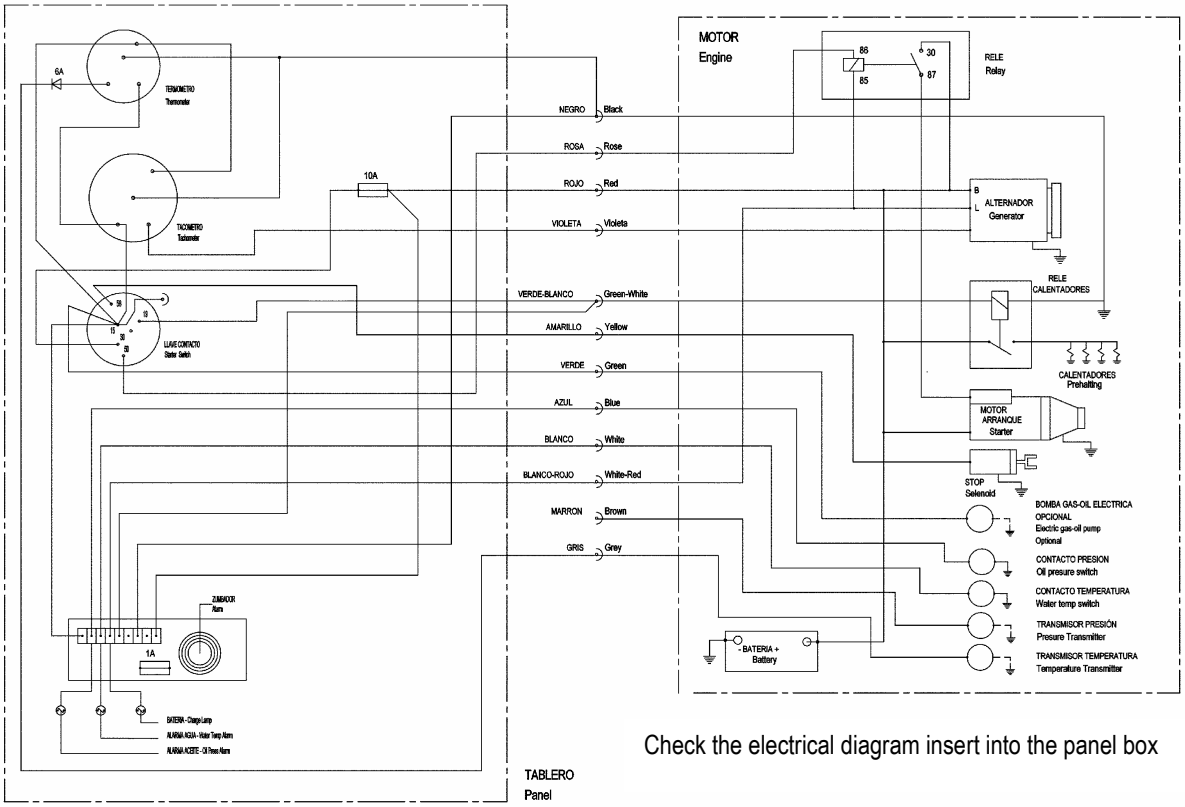

Check the electrical diagram insert into the panel box

2.5.2. ELECTRICAL PLANT AND INSTRUMENTAL PANEL SVT

	DENOMINACIÓN
A	GLOW PLUG OPERATION LAMP
B	BATTERY CHARGE LAMP
C	WATER TEMPERATURE ALARM LAMP
D	OIL PRESSURE ALARM
E	SEAWATER TEMPERATURE ALARM LAMP
F	THACHOMETER
G	HOUR COUNTER
H	COOLANT TEMPERATURE GAUGE
I	STARTER

ENGINE	Part. No.
MINI-17/26/29 (12V)	60938130
MINI-33/44/55 (12V)	60972130
MINI-33/44/55 (24V)	60973130

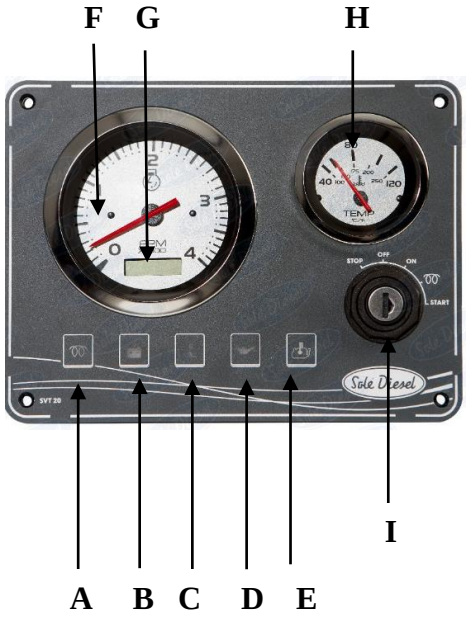

Standard panel SVT 20 (12V/24V)

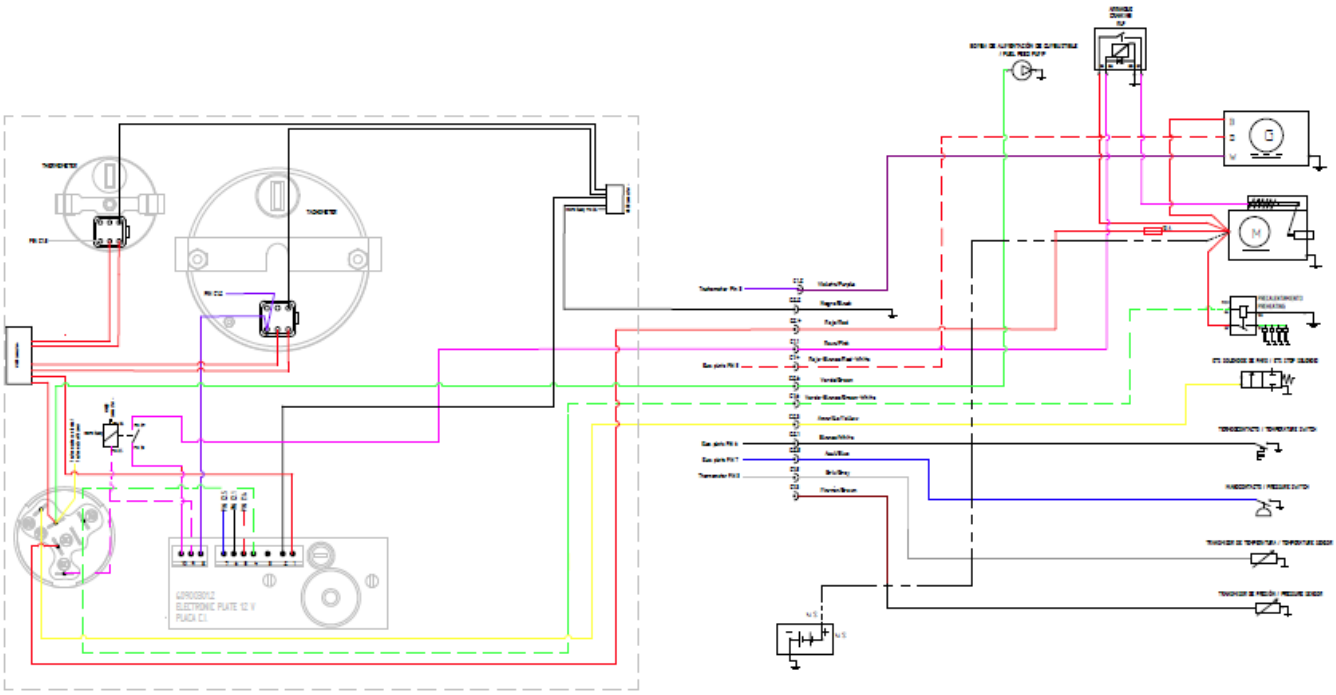

2.6 TECHNICAL SPECIFICATIONS.

	UNITS	MINI-17	MINI-26	MINI-29	MINI-33	MINI-44	MINI-55
Cylinders number		2	3	3	3	4	4
Bore	Mm	76	76	79	78	78	78
Stroke	mm	70	70	70	92	92	92
Total desplacement	c.c.	635	952	952	1318	1758	1758
Compression ratio		23:1	23:1	22:1	22:1	22:1	22:1
Min. Ilding speed	r.p.m.	800	800	750	900	900	900
Max engine speed	r.p.m.	3600	3600	3600	3000	3000	3000
Standard reducer gearbox & ratio	RONIM-V	2.25:1 3.05:1	2.25:1 3.05:1	2.25:1 3.05:1	2.25:1	---	---
	SMI-R2	---	---	---	2:1 2.5:1 3:1	2:1 2.5:1 3:1	---
	SMI-R3	---	---	---	2:1 2.5:1	2:1 2.5:1	2:1 2.5:1
	TMC40	2:1 2.6:1	2:1 2.6:1	2:1 2.6:1	2:1	---	---
	TTMC35P					1.96:1 2.6:1	1.96:1 2.6:1
	TTMC35A2	2.33:1	2.33:1	2.33:1	2.33:1	2.33:1	2.33:1
Max assembly angle	º	15	15	15	15	15	15
Crankshaft power ISO-8665	kW / HP (2)	11.8 / 16.05	18.4 / 25.02	20 / 27.2	23.1 / 31.42	30.90 / 42.02	38.80 / 50.05
Prop shaft power	kW / HP	11.4 / 15.5	17.8 / 24.2	19 / 25.8	22.8 / 31	29.9 / 40.6	36.5 / 49.95

Oil capacity	liters	2.4	3.6	3.6	4.2	6.0	6.0
Gearbox oil capacity (in liters) (1)	RONIM-V	0.5	0.5	---	0.5	---	---
	SMI-R2	---	---	---	0.8	0.8	---
	SMI-R3	---	---	---	1.3 (ATF)	1.3 (ATF)	1.3 (ATF)
	TMC40 (3)	0.2 (ATF)	0.2 (ATF)	0.2 (ATF)	0.2 (ATF)	---	---
	TMC60 (3)	---	---	---	---	0.65 (ATF)	0.65 (ATF)
	TTMC35P (3)	---	---	---	0.5 (SAE-20 / 30)		
	TTMC35A2 (3)	0.65 (SAE-20 / 30)					
Min oil pressure (hot engine)	kg/cm²	0.5	0.5	0.5	0.5	0.5	0.5
Cooling water capacity	liters	3.0	4.0	4.2	6.25	8.0	8.0
Injection pump		BOSCH NC	BOSCH NC	BOSCH	BOSCH NC	BOSCH M	BOSCH M
Injection pressure	bar	140	140	140	140	140	140
Ignition sequence		1-2	1-3-2	1-3-2	1-3-2	1-3-4-2	1-3-4-2
Valve timing (intake open)	BTDC (4)	17º	17º	19º	17º	17º	14º
Alternator (12V)	A	40 A	40 A	40 A	50 A	50 A	50 A
Starter (12V)	kW	1.2	1.2	1.2	1.7	1.7	1.7
Valve clearance (cold engine)	mm	0.25	0.25	0.25	0.25	0.25	0.25
Weight dry with gearbox	RONIM-V	98	112	---	155	---	---
	SMI-R2	---	---	---	---	190	---
	SMI-R3	---	---	---	---	190	---
	TMC40	95	---	105	152	---	---
	TTMC35P	---	---	---	154	172	189
	TTMC35A2	99	---	109	156	174	191

(1) Read section 9.0.2. For inverters type RONIM-V, SMI-R2 and SMI-R3 to know when ATF oil is used.
(2) Motors introduced on the market before January 18, 2017 have a power of 38.26 kW / 52 hp for the Mini-55.
(3) Read the inverter specific manual supplied with the motor.
(4) Read section 9.3.

2.6.1 ENGINE DIMENSIONS

MINI-17/26 + RONIM-V

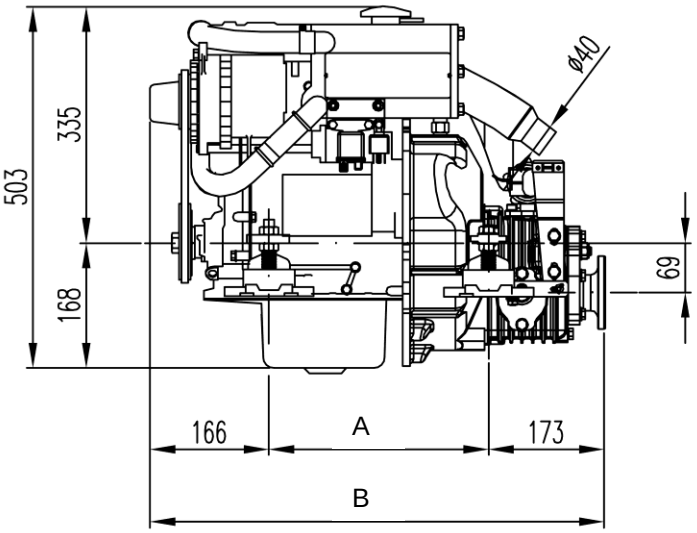

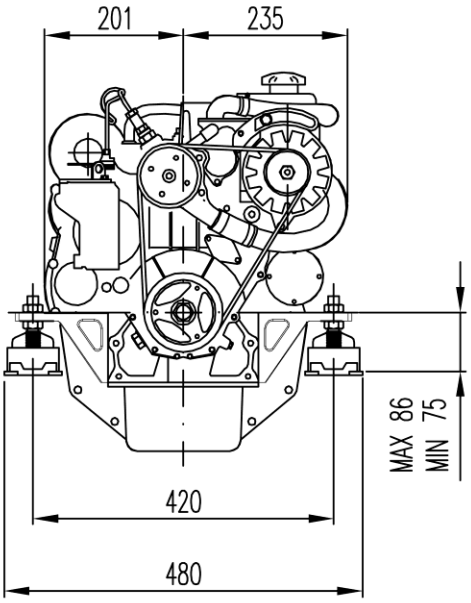

MINI-17/26 + TMC40

(all versions)

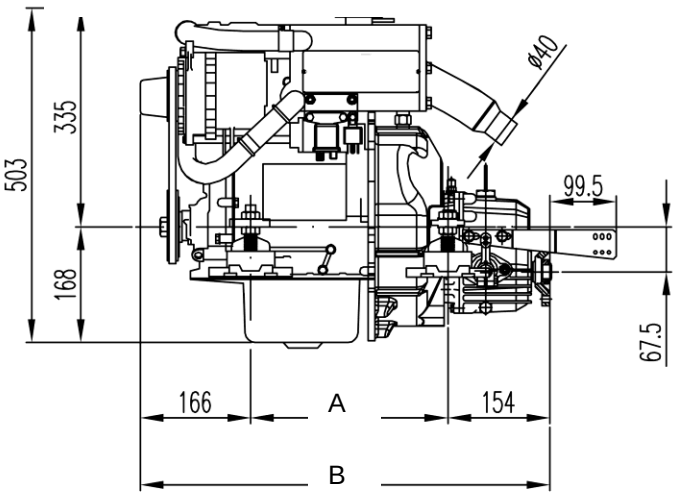

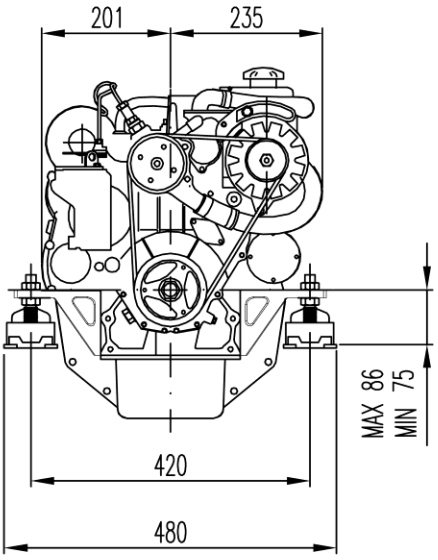

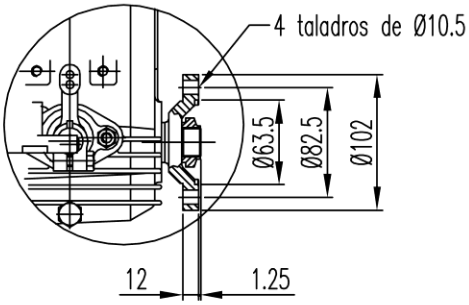

	RONIM-V		TMC-40	
	A	B	A	B
MINI-17	295 mm	634 mm	295 mm	615 mm
MINI-26	384 mm	723 mm	384 mm	704 mm

MINI-29 + TMC40 (all types of TMC40)

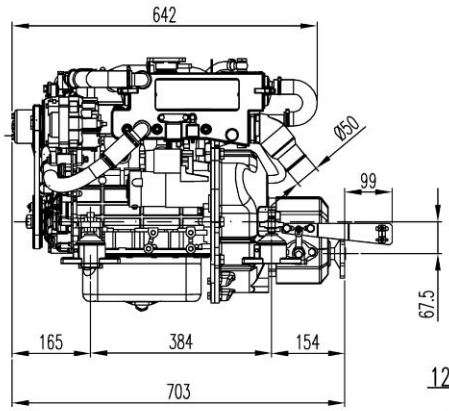

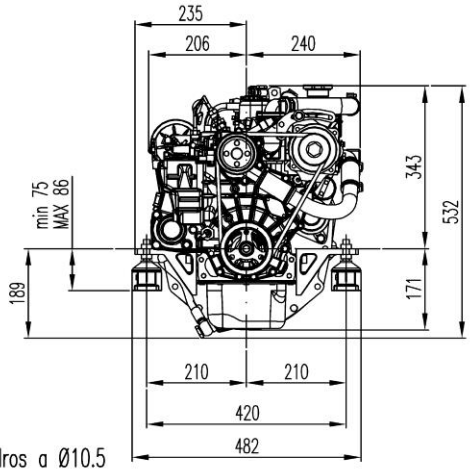

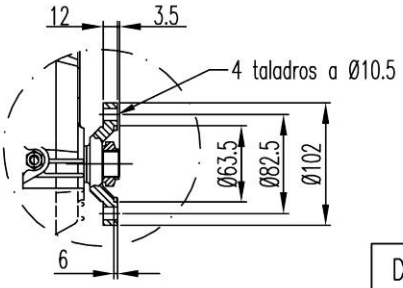

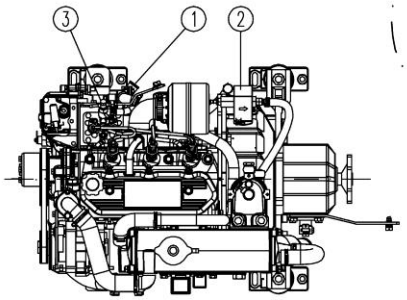

DATOS TÉCNICOS – TECHNICAL DATA

(1) Entrada agua salada. Conectar manguera Ø20 mm.
Sea water inlet. Use water hose Ø20 mm.

(2) Manguera entrada combustible
Fuel hose inlet

(3) Manguera Retorno combustible
Fuel return hose

MINI-29 + TTMC35A2

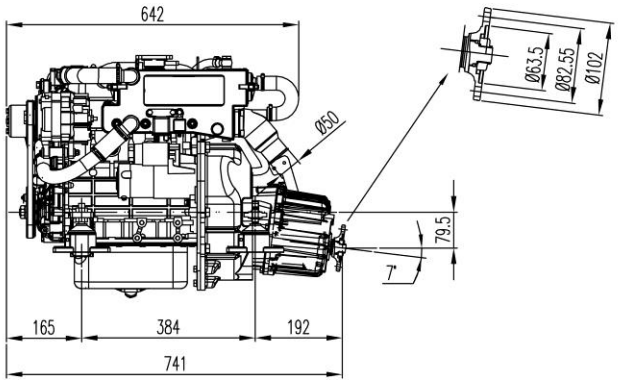

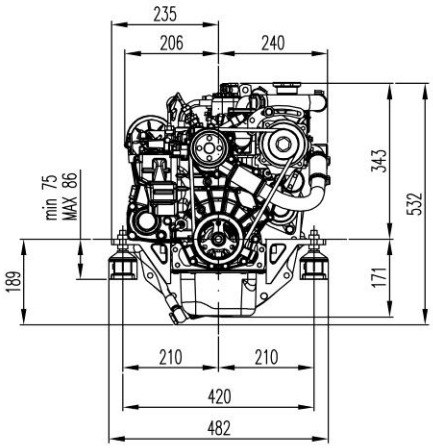

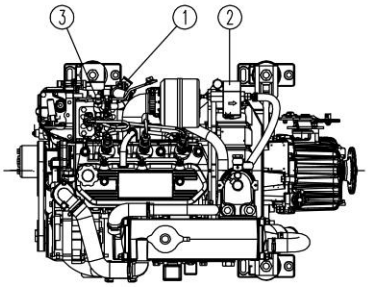

DATOS TÉCNICOS – TECHNICAL DATA

(1) Entrada agua salada. Conectar manguera Ø20 mm.
Sea water inlet. Use water hose Ø20 mm.

(2) Manguera entrada combustible
Fuel hose inlet

(3) Manguera Retorno combustible
Fuel return hose

MINI-33 + RONIM-V

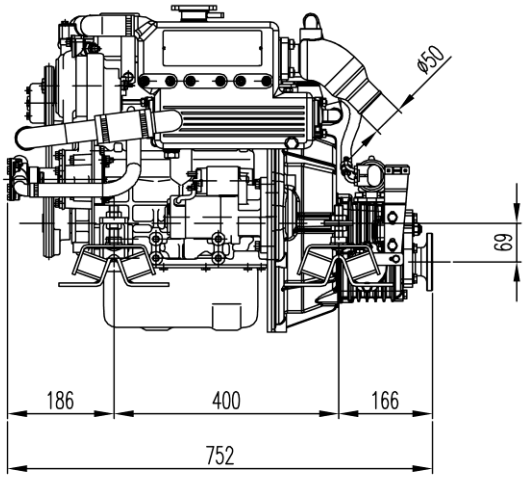

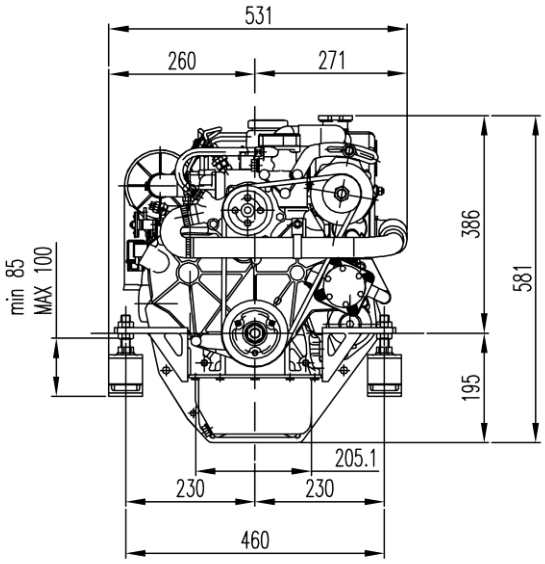

MINI-33 + TMC40

(all versions)

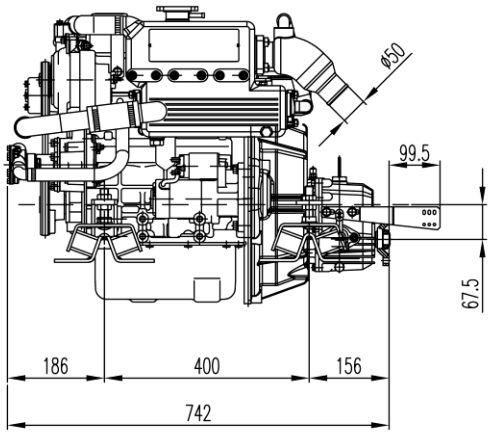

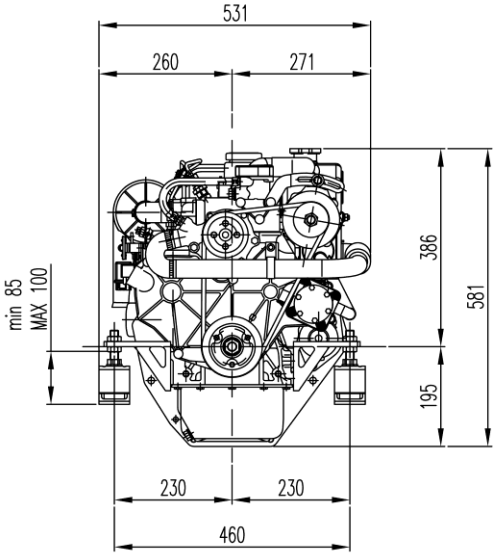

MINI-33 + TTMC35A2

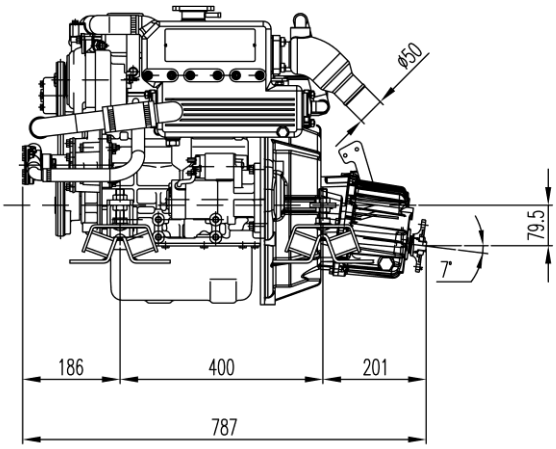

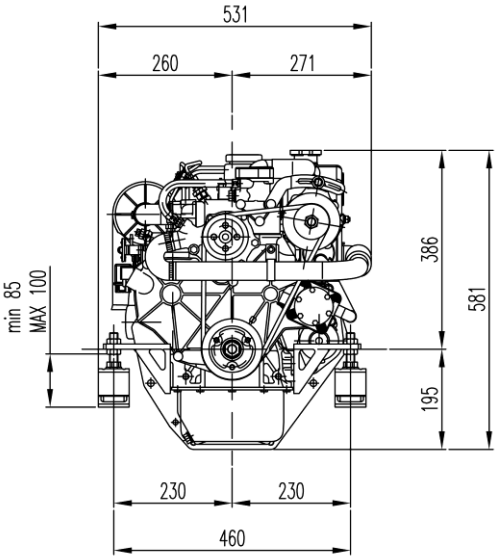

MINI-44 + SMIR3

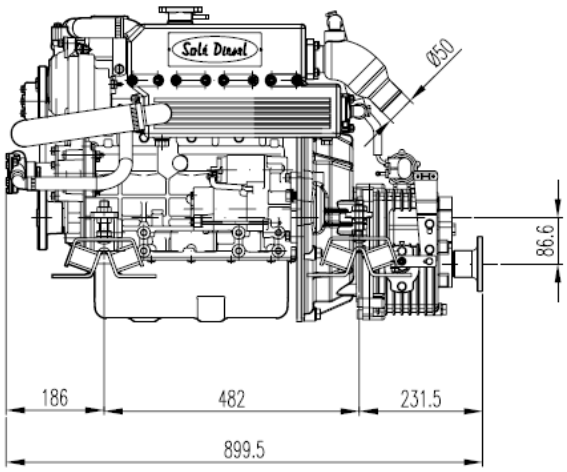

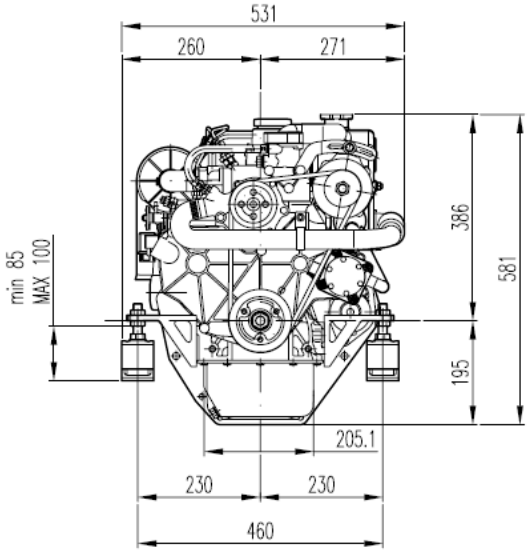

MINI-44 + TTMC35P

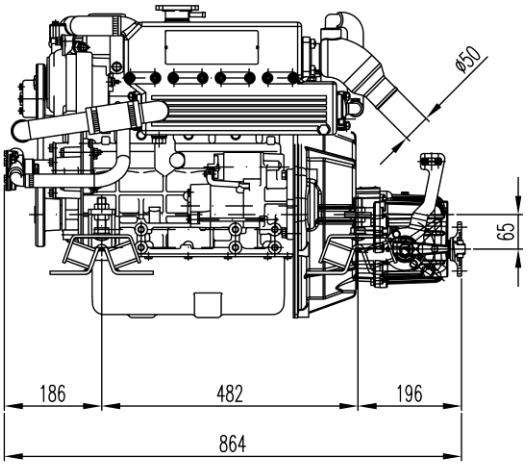

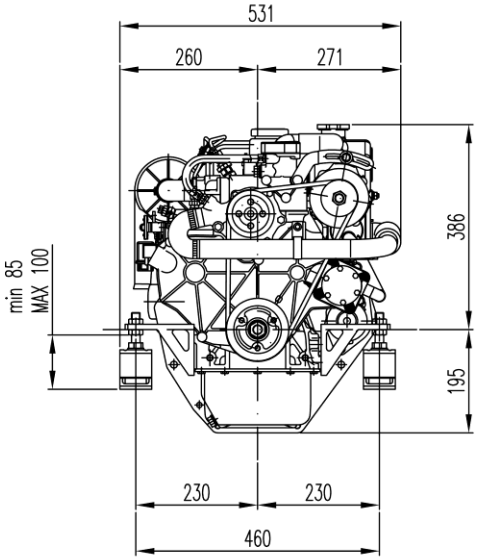

MINI-44 + TTMC35A2

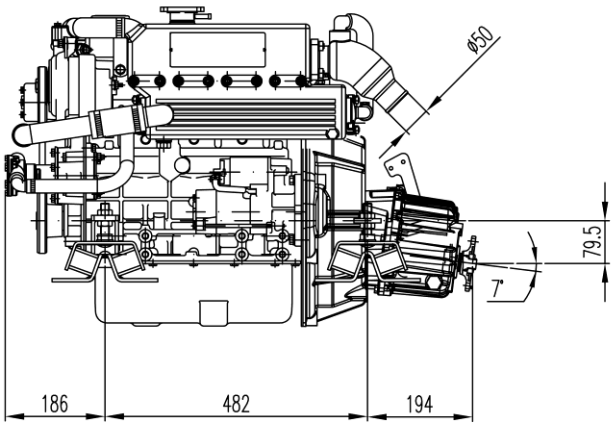

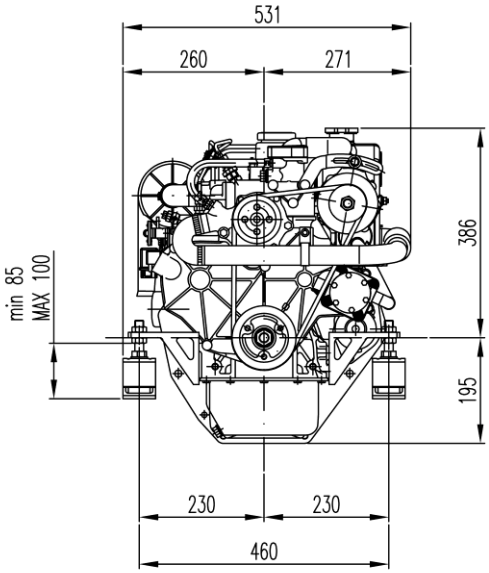

MINI-44 + TMC60

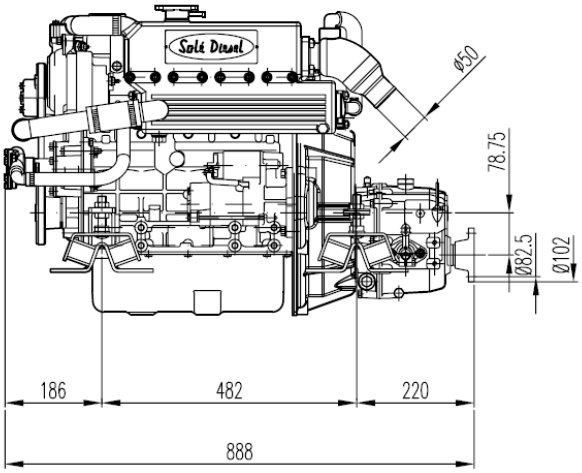

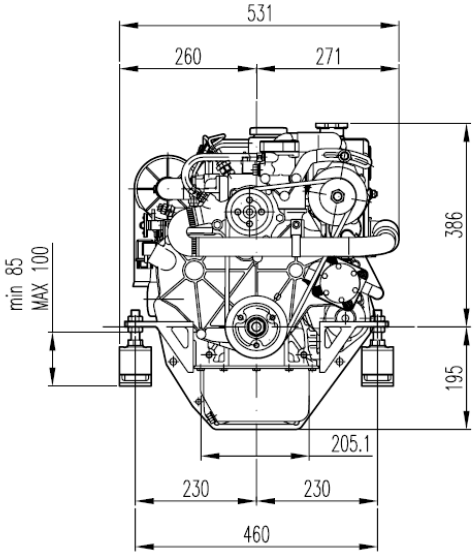

MINI-55 + TTMC35P

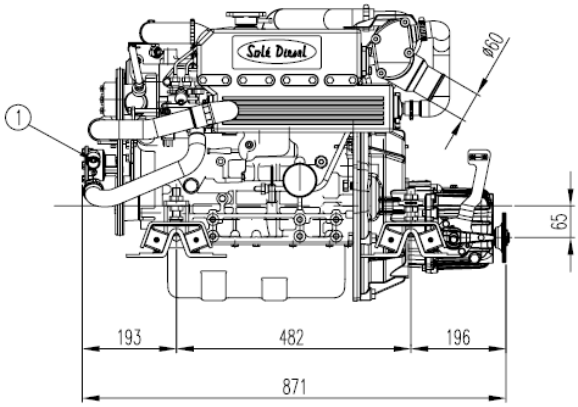

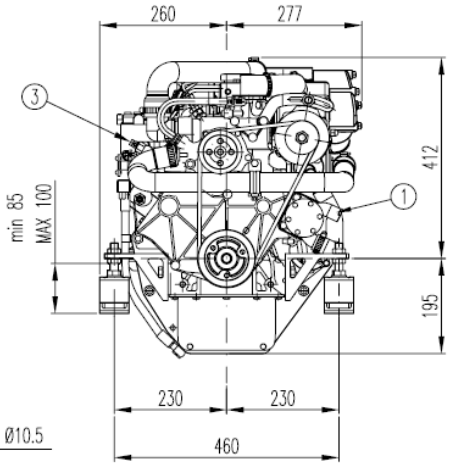

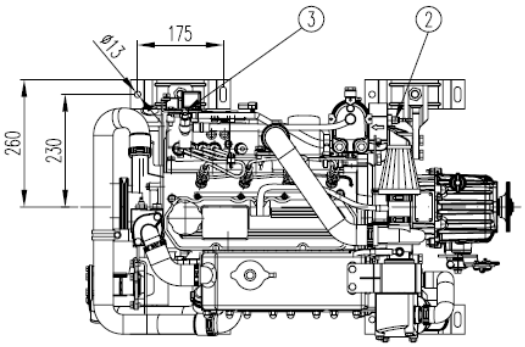

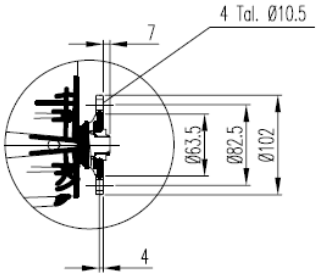

DATOS TÉCNICOS – TECHNICAL DATA

(1) Entrada agua salada. Conectar manguera Ø26 mm.
Sea water inlet. Use water hose Ø26 mm.
(2) Manguera entrada combustible = Ø6 mm.
Fuel hose inlet = Ø6 mm.
(3) Manguera Retorno combustible = Ø5mm
Fuel return hose = Ø5 mm.

MINI-55 + TMC60

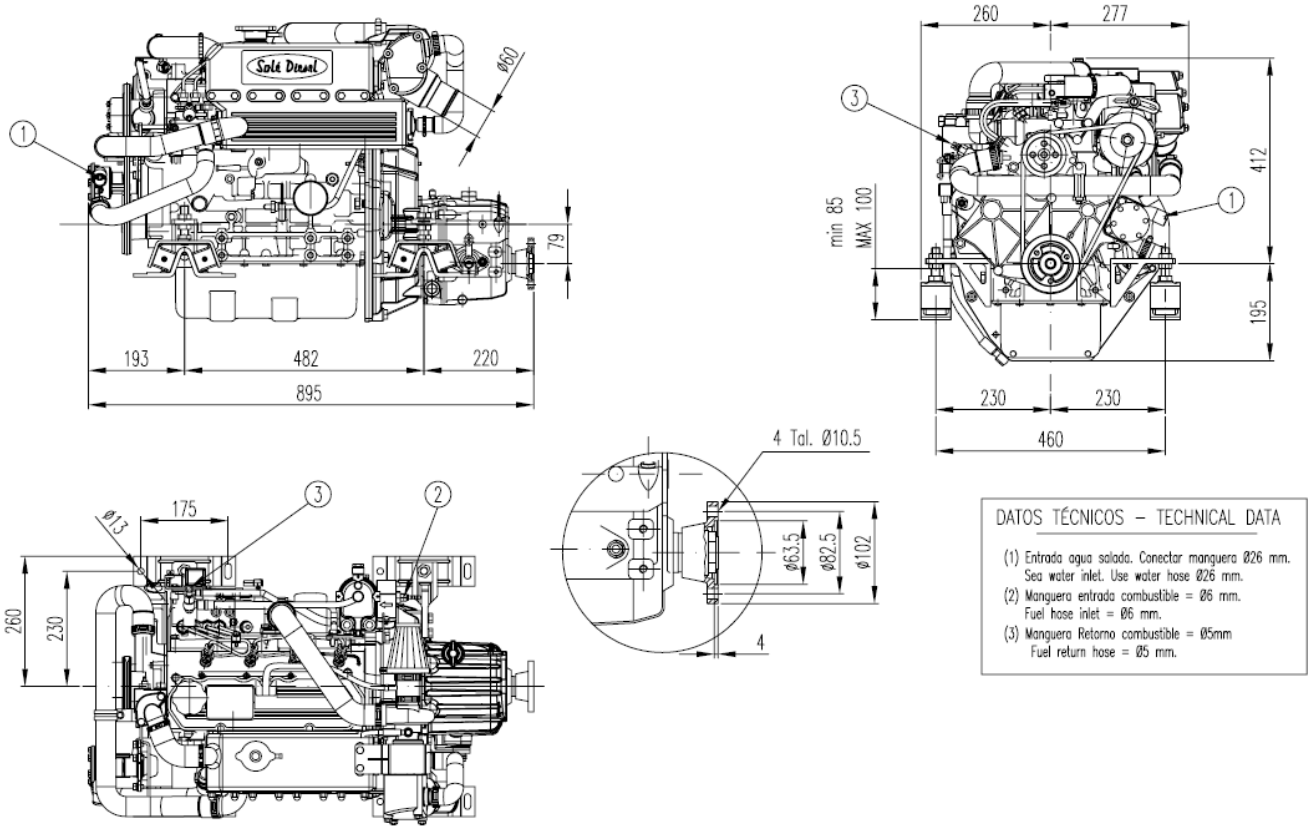

2.7 GEARBOX, GENERAL INFORAMTION

The mechanically driven (RONIM-V, SMI-R2 and SMI-R3) gearbox is made with high mechanical and seawater resistance grey castiron alloy.

Operation: With engine at idle speed, smoothly push forwardly the inverter lever (forward gear) and rearwardly (rear gear) according to the sense wanted.

For the rest of the gearboxes, read the specific gearbox manual attached.

3. TRANSPORT, HANDLING, STORAGE

3.0 GENERAL WARNINGS

Refer to heading 1.3 for safety information.

3.1 PACKING AND UNPACKING

The engine is shipped in various types of packing systems:

	STORAGE	STACKING OF PACKS:
Pallet with wooden crate (See heading 3.1.1)	covered area only.	Max. 1+1
-Pallet with skeleton crate (See heading 3.1.2)	covered area only.	NO
-Engine mounting base + plastic packaging(See heading 3.1.3)	covered area only.	NO

3.1.1 PACKING AND UNPACKING WITH PALLET AND WOODEN CRATE

Remove the lower nails. Lift the engine using chains with safety hooks and of suitable load capacity. Attach the chain hooks to the engine eyebolts and lift using a forklift or other suitable lifting equipment as described in heading 3.3.

Transfer the engine to the intended position of installation and remove the plastic wrap film. Unscrew screws that secure the engine to the wooden base withdraw the base and proceed with installation operations.

3.1.2 PACKING AND UNPACKING WITH PALLET AND SKELETON CRAT

Remove the lower nails. Lift the engine using chains with safety hooks and of suitable load capacity. Attach the chain hooks to the engine eyebolts and lift using a forklift or other suitable lifting equipment as described in heading 3.3.

Transfer the engine to the intended position of installation and remove the plastic wrap film. Unscrew screws that secure the engine to the wooden base with draw the base and proceed with installation operations.

3.1.3 PACKING AND UNPACKING WITH ENGINE MOUNTING FIXTURE AND PLASTIC PACKAGIN

Lift the engine using chains with safety hooks and of suitable load capacity. Attach the chain hooks to the engine eyebolts and lift using a fork lift or other suitable lifting equipment as described in heading 3.3.

Transfer the engine to the intended position of installation and remove the plastic wrap film. Unscrew screws that secure the engine to the wooden base with draw the base and proceed with installation operations.

3.2 RECEIPT

When the engine is delivered make sure that the packing has not been damaged during transport and that it has not been tampered with or that components inside the packing have been removed (see information marked on covers, bases and cartons).

Place the packed engine as close as possible to the place of installation and remove the packing material, checking that the goods supplied correspond to the order specifications.

☞ if you notice damage or missingparts, inform solé dieselassistance departments and the carrier immediately and foward photographic evidence of the damage

☞ important:
After inspecting the goods if you notice damage etc. write areservation on the delivery note. Have the carrier countersing the note and advise SOLE S.A., preferably by telefax.

3.2.1 PACKING LIST

(1) ASSEMBLED ENGINE
(2) TECHNICAL DOCUMENTATION

☞ the technical documentation contains: instruction and user manual.

Packing material must be disposed of in compilance with established law in the user's country. Packing materials: Wood Steel nails Steel screws Plastic film Cardboard Metal or plastic straps

3.3 TRANSPORT AND HANDLING THE PACKED ENGINE

When lifting and transporting the engine use EXCLUSIVELLY a fork lift or bridge crane of appropiate load capacity, with chains equipped with safety hooks suitable for lifting the load.

The use of any other system automatically invalidates the insurance guarantee against possible damage to the engine.

3.4 TRANSPORT AND HANDLING OF THE UNPACKED ENGINE

When the engine is unpacked ready for transport, use EXCLUSIVELLY theap propiate lifting eyebolts (A), see the picture 3.4.

Choose the lifting equipement with reference to heading 3.3.

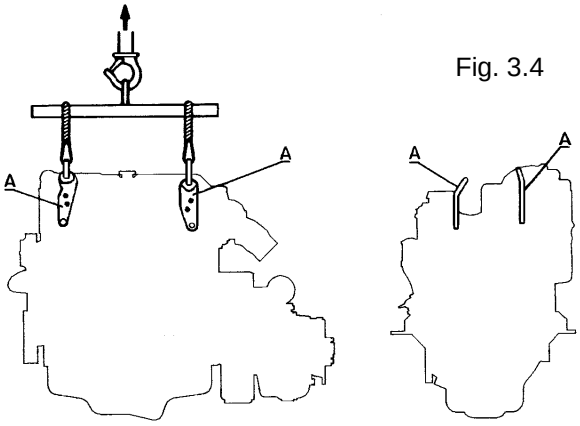

Fig. 3.4

3.5 STORAGE OF PACKED AND UNPACKED ENGINE

If the engine is left idle for prolonged periods, the client must check the possible conditions of conservation in relation to the place of storage and the type of packing system (base, pallet, etc.).

If the engine is unused for prolonged periods and stored, observe all the relative technical specifications.

The treatment of the engine for storage is guaranteed for6 months after the time of delivery..

⚠ if the user decides to startthe engine after a longertime period, this must bedone in the presence of anauthorised technician

4. INSTALLATION

4.0 GENERAL WARNINGS

Refer to heading 1.3 for safety information.

4.1 ASSEMBLY DATA

	(kgf · m)				
TIGHTENING VALUES	**MINI-17 / 26**	**MINI-29**	**MINI-33 / 44**	**MINI-55**	
M14 Cylinder head bolts	---	---	---	---	
M12 Cylinder head bolts	---	---	---	---	
M10 Cylinder head bolts	7.5 – 8.5	7.5 – 8.5	9.0 ± 0.5	9.0 ± 0.5	
M18 Cylinder head bolts	2.0 – 3.0	2.0 – 3.0	---	---	
Crankshaft pulley to crankshaft	10 – 12	10 – 12	17.5 ± 0.25	17.5 ± 0.25	
Main bearing bolts	5.0 – 5.5	5.0 – 5.5	5.25 ± 0.25	5.25 ± 0.25	
Connecting rod bolts	3.2 – 3.5	3.2 – 3.5	3.55 ± 0.25	3.55 ± 0.25	
Flywheel bolt	8.5 – 9.5	8.5 – 9.5	13.5 ± 0.5	13.5 ± 0.5	
Oil pan drain plug	5.0	5.0	4.0 ± 0.5	4.0 ± 0.5	
Oil filter	1.2	1.2	1.2 ± 0.1	1.2 ± 0.1	
Pressure relief valve	4.5	4.5	5 ± 0.5	5 ± 0.5	
Holder body retaining nuts	3.5	3.5	5.5 ± 0.5	5.5 ± 0.5	
Nozzle holder mounting bolts	3.0	3.0	3.75 ± 0.25	3.75 ± 0.25	
Glow plug	2.0	2.0	1.75 ± 0.25	1.75 ± 0.25	
Nut for B terminal of starter	1.1	1.1	1.1 ± 0.1	1.1 ± 0.1	
Reversing gear flange setscrew	12.0	12.0	12.0	12.0	
Water cooler element locknut	2.3	2.3	2.3	2.3	
Reversing gear body setscrew	5	5	5.0	5.0	
Oil gearbox drain plug	3.5	3.5	3.5	3.5	
General tightening torque	M6 …. 1.0	M6 …. 1.0	M6 …. 1.0	M6 …. 1.0	
	M8 …. 2.5	M8 …. 2.5	M8 …. 2.5	M8 …. 2.5	
	M10 … 6.0	M10 … 6.0	M10 … 6.0	M10 … 6.0	
	M12 … 10.0	M12 … 10.0	M12 … 10.0	M12 … 10.0	

CYLINDER HEAD BOLTS TIGHTENING SEQUENCE:
When bolting the cylinder head, clean throughly the contact faces and fit the head gasket. Entighten one screw at a time when engine is cold as indicated in the suitable drawing. Loosen must be done using the reverse sequence.

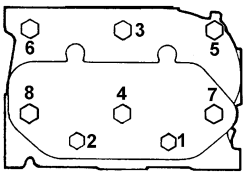

MINI - 17

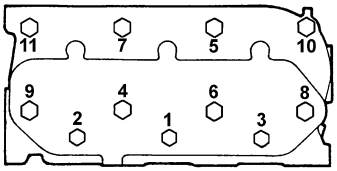

MINI – 26 / 29

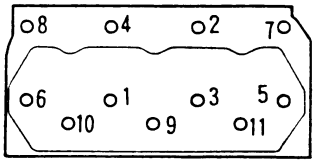

MINI - 33

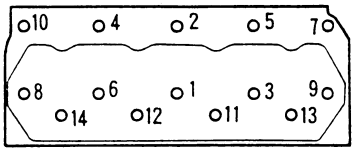

MINI – 44 / 55

4.2 ENGINE SUPPLIES

4.2.1 CHANGING OIL

4.2.1.1 CHANGING ENGINE SUMP OIL

Use oil that corresponds to the technical specifications in chapter 9.

Oil shall be changed with a hot engine so as to be sure the oil is fully drained. This is done by removing the stopper and mounting the drain pump. (Fig. 4.1).

When drained, fill with fresh oil through the filler hole.(Fig. 4.2).

Oil sump capacity: see heading 2.6 (technical specifications).

Immediately operate engine at idling for some minutes until the dashboard control light is switched off.

Stop engine. Check filter and engine sealing. Check then oil level, by removing the rod (Fig. 4.3), cleaning it witha rag and repositioning it by retightening.

Remove it again immediately to check oil level and if it does not reach the top sign add carefully more oil through the filler hole (Fig. 4.2) up to the top rod sign.

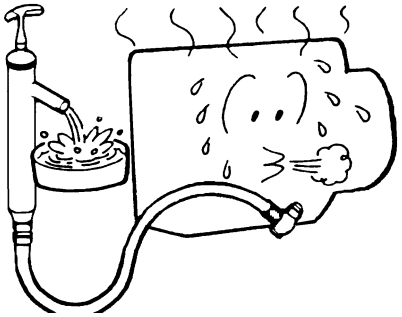

Fig. 4.1

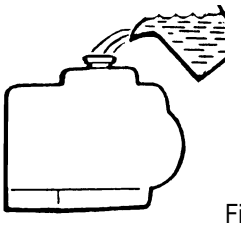

Fig. 4.2

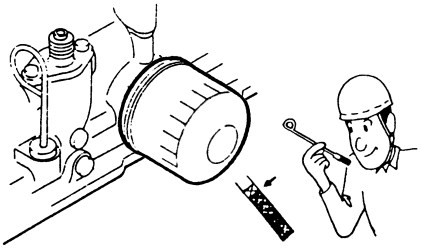

Fig. 4.3

☞ be careful that any rod marksrefer to the engine at a horizontal position. Therefore, check the engine inclinationwhen the level is verified. Read chapter 9.2

4.2.1.2 CHANGING GEARBOX OIL

Gearbox has its own lubrication, independent from the engine. To perform an oil change, drain the used oil by removing the plug located at the lower rear side (Fig. 4.4).When drained, tighten the plug and fill with fresh oil through the hole of the level rod (Fig. 4.5).

Oil gearbox capacity: see heading 2.6 (technical specifications).

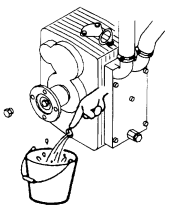

Fig. 4.4

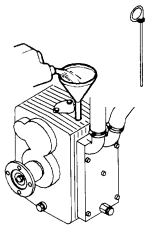

Fig. 4.5

warning:
the use of oil that does not conform to the technical specifications on chapter 9 will cause serious damage to the engine and invalidate the guarantee.

when supplying the engine never ingest oil, fuel, coolant liquid, etc.. these substances are harmful to the personal health of the user if ingested

4.2.2 FILLING THE COOLING CIRCUIT

As a refrigerating liquid, an anti-freeze of the brand **KRAFFT ACU 2300 CC 50% Ref. 1325** or another one with similar specifications must be used.

The incorrect use of water in the refrigeration circuit is extremely harmful, causing corrosion and scaling, while the use of anti-freeze protects the circuit from corrosion, scaling and from freezing in conditions of very low temperature, thus optimizing engine maintenance and reliability.

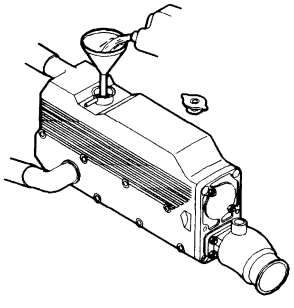

Fig. 4.7

warning!
do not allow AC88 liquid to come into contact with the eyes or the skin

warning!
do not ingest any of the liquids utilised to fill the various circuits on the engine

When distilled water is used in the refrigeration circuit, an anti-freeze product must be added, otherwise the expansion of water when it freezes may produce cracks and damage to the refrigerator unit and to the block, and in proportion to the temperatures expected.

The anti-freezing agent manufacturer, in the package labels is giving the instructions to be followed at each case. However, in the following box, suitable rates a reset out in accordance with temperatures:

Ant freezing liquid concentration (%)	30	40	50	60
Freezing temperature (ºC)	-10	-20	-30	-45

It is advisable the anti-freezing agent strength is selected based on a temperature which is approx. 5ºC under the actual atmospheric temperature.

The anti-freeze solution recommended can be used fora normal operation of 2 years. At the end of this period of time the refrigeration circuit must be emptied and cleaned, then refilled with the predetermined anti-freeze (see 4.2.2).

Run the engine for a few minutes until the cooling circuit is properly filled and free of air pockets. Check the coolant level and replenish if necessary.

warning!
after the first 50 hours of engine duty and at six months or 1000 hours intervals thereafter, addrust inhibiting agent AC88 to the coolant in the same proportions as indicate earlier. The cooling liquid mixture must be topped up with identical mixture and totally drained and replaced every 2 years.

warning!
the use of coolants that are not in conformity with the above prescriptions will cause damage to engine components and invalidate the terms of the guarantee.

4.2.3 REFUELING

Always use clean, filtered gas oil. Never use either kerosene or heavy oils. On topping up with fuel, use a funnel with a metallic mesh filter, to keep out impurities or foreign bodies which may cause problems in the fuel injection circuit.

Whenever possible, keep the fuel tank full, as temperature changes may cause condensation of the damp air present in the tank so that water accumulates at the bottom, giving rise to corrosion or making it impossible to start the engine if this is aspirated by the fuel pump.

Check all tank filling plugs located at the boat deck are sealed..

warning!
Do not use dieselfuel mixed with water orany other foreingsubstances

warning!
Always use top quality fuel of certified origin. the use of dieselfuel that does not comply with the technical specifications indicated above will cause serious damage to the injection system and hence to the engine and also invalidate the terms of the guarantee

4.3 INSTALLATION

warning!
When water-cooled engines must be located in an enclosed place or protected by guards or a cabinet, it is important to ensure thatcombustion air is freely supplied and freely expelled from the area

The above recommendation is of primary importance in relation to the perfect operation of the engine because the hot air that it generates must never be routed to the area of the combustion air intake cleaner.

If the users fails to take these precautions, a hot air recirculation system will be formed thus reducing engine power output and obstructing proper cooling.

In these cases it is advised to take steps to avoid taking in engine combustion air from the place in which the engine is installed. This is achieved by placing the suction filter, or a suction prefilter, outside the place in which the engine is installed.

4.4 INDICATIONS FOR REMOVAL / DISPOSAL OF WASTE MATERIAL

warning!
Disposal of waste material must be carried outin conformity withestablished legislation inthe country of installation.

5. PREPARING THE ENGINE FOR USE

5.0 GENERAL WARNINGS

Refer to heading 1.3 for safety information.

5.1 INSTRUCTIONS FOR FIRST STARTING

Do not alter the functioning conditions of the engine by changing the settings of factory sealed parts. Tampering with such parts automatically invalidates the guarantee. Proceed as follows when starting the engine for the first time:

(a) FILLING WITH OIL See heading 4.2.1 and heading 2.6 for oil sump capacity.
(b) FILLING WITH COOLANT (See heading 4.2.2)
(c) REFUELING. See heading 4.2.3. Check fuel delivery cock is fully opened.
(d) OPEN SEAWATER ENTRY COCK
(e) CONNECT THE BATTERY CONNECTOR
(f) REMOTE CONTROL CONNECTION

(f.a) Engine:

Connect control cable to the ball-joint fitted to the lever(A) and position the cable with the clamp (B).

Adjust in a way that gas is not delivered until the inverter gear is engaged (Fig. 5.1)

See picture 5.1A for MINI-17/26/29 engines.
See picture 5.1B for MINI-33/44/55 engines.

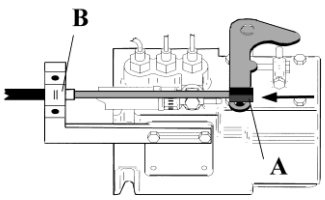

Fig. 5.1A

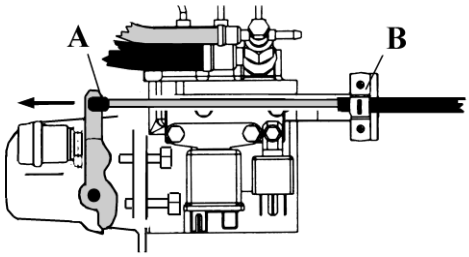

Fig. 5.1B

(f.b) Gearbox:

Connect control cable to the lever by means of the ball-joint provided for this purpose and position cable with the clamp. When fitted, adjust control in a way that it has the same forward running that rearward and gas is not delivered until the gear is perfectly engaged (Fig.5.2).

To check fitting is correct, proceed as follows: Place the gearbox lever and remote control lever in the position of forward running. Adjustment is made by way of the elongated holes of the control and the elongated holes of the cable attachment support.

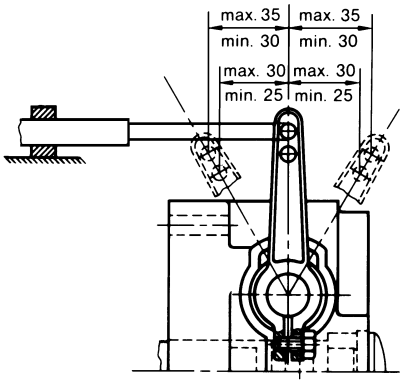

Fig. 5.2

(g) OTHER CHECKINGS

(g.a) Carefully check the engine positioning points.
(g.b) Check all screws are correctly tightened.
(g.c) Check all water, oil and gas-oil pipe nipples, verifying if all them are well connected and correctly tightened.
(g.d) Check exhaust and transmission systems.

5.1.1 BLEEDING AIR FROM THE FUEL SUPPLY SYSTEM

On the first start-up of the engine, and if this has operated with the fuel tank empty, air may enter the feed system, and it is necessary to purge this. To carry out the priming/purge of the fuel system, proceed as follows:

(1) Check fuel cock located at the tank delivery is open.

(2) For engines equiped with Ronim-V and SMI gearboxes, then operate repeatedly (for 6 or 7 times) the lever ofthe fuel pump (fig. 5.3). If the manual pump valve is clogged, difficult bleddingcan result. In such a case, remove the air vent bolt and inlet-side hose from the filter and clean the valve with presssure air.

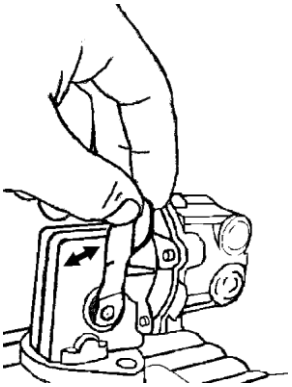

Fig. 5.3

(3) For engines equiped with electrical priming puma, operate the key to “ON” position. Do not run the starter motor for more than 20 seconds at a time.

The air bledding from the injection pump and from the injectors is automatic.

Once this operations have been terminated proceed to start the engine (see heading 6.1)

warning!!
Protect hands. Fuel can harm the skin.

5.2 PRELIMINARY RUNNING TESTS

5.2.1 NO-LOAD RUNNING TEST

Run the engine at low speed for a few minutes. Keep a constant check on the oil pressure (see heading 2.3).

5.2.2 RUNNING-IN

During initial run-in, may last lasts for the first 50 hours of duty, take into account the following points:

(1) Daily checking performances must be made without failure.
(2) Engine must be operated at idle speed and heated up minimum 5 minutes after its starting.
(3) Avoid a speeded-up acceleration.
(4) Use the engine at 100% of maximum power for limited periods.
(5) Carefully comply with the inspection and maintenance instructions shown in this manual.

warning!
The longer the initial running-in period with reduced loads, the longer will be the working lifetime of the various parts of the engine with consequent savings in termsof maintenance and running costs

6. USING THE ENGINE

6.0 GENERAL WARNINGS

Refer to heading 1.3 for safety information.

6.1 STARTING THE ENGINE

For MINI-17/26/29/33/44/55 engines

a) **Place control lever at the neutral point.**

b) **Rotate the ignition key to position "ON"**
Check oil pressure, battery charge lamps are lighted and the alarm is heard (refer to heading 2.5.1 for lamps position).

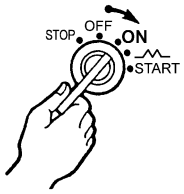

c) **Pre-heating of incandescent spark plugs.**
Rotate ignition key to position "pre-heating" and hold in this position for a maximum of 6 seconds.

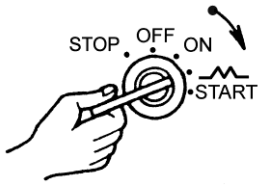

d) **Starting.**
Place the remote control lever to neutral point and deliver gas up to the half position, rotate the ignition key to the "START" position until the engine starts running. If the engine does not start running, even with the ignition key in the "START" position for10 seconds, draw your hand out from the key for 30seconds and then try again to start the engine, if necessary heating again the glow plugs.

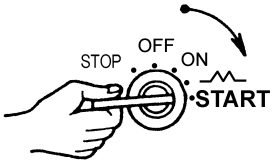

⚠ warning!
Do not run the starter motor for more than 20 seconds at a time

Once the engine has started, release the ignition key, allowing it to automatically return to the "ON" (running)position and disconnecting the starter motor. Immediately adjust the accelerator to prevent the engine reaching high-speed. When the engine is running, do not turn the ignition key to the "START" position as this would seriously damage the starter motor.

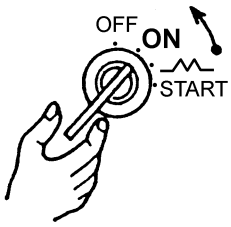

After the starting operation, check oil pressure and battery charge lamps are switched off.

e) **Heating.**

Heat the engine for approx 5 minutes, allowing it to run with no-load at half feed.

If engine is heated, the pre-heating operations should not be done. In this case, directly rotate the ignition key to the "START" position until the engine is running.

6.2 STOPPING THE ENGINE

For MINI-17/26/29/33/44/55 engines

Allow to run at low speed for 4 or 5 minutes and place the gearbox remote control lever in the neutral position. Turn the starter key to “STOP”

And mantain this position until the engine is fully stopped. With the engine stopped the starter key returns to “OFF” position automatically.

If engine is not to run for a longer period, it is advisable to shut fuel and water cocks and also to disconnect the battery.

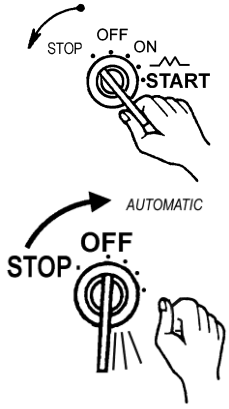

6.3 USING THE ENGINE INFREQUENTLY

Take special precautions in installations where the engine must cut in rapidly and suddenly after long periods of inactivity (emergency power systems, fire prevention systems and harsh ambient conditions).

For specific application conditions consult SOLÉDIESEL.

6.4 OPERATING THE ENGINE AT LOW TEMPERATURES

Whenever the atmospheric temperature drops below zero, the following series of circumstances occur:

(1) The cooling liquids of the engine may freeze.
(2) The lubricating oil becomes thicker.
(3) There is a grop in the voltage at the battery terminals.
(4) The air inlet temperature is low and the engine has difficulty in starting.
(5) The fuel loses fluidity.

To prevent the damage caused by low temperature operation, the engine should be prepared as follows:

(1) Use anti-freeze as indicated in section 4.2.2 of this manual.

(2) When the engine is to be stopped, close the sea watercock, open the sea-water filter cover and start the engine adding a mixture of fresh water and 30% anti-freeze until the sea-water circuit is filled completely. Stop the engine and replace the sea-water filter cover. Before starting the engine again, open the sea-water cock. Repeat this operation whenever the engine is used at temperatures below ºC.

(3) Make sure that the lubricant oil is good quality and has a suitable viscosity. SAE 10W/30 synthetic oil is recommended.

(4) Protect the battery against the cold, covering it with an adequate material. Check that the battery is fully charged. It is also advisable to use a dielectric spray on the electrical connections.

(5) When starting the engine, make sure that the heating plugs become hot enough. Follow the instructions detailed in section 6.1 of this manual.

(6) If necessary, to replace the fuel with a type more suited to low temperature operation. The accumulation of impurities in the fuel tank could cause faulty firing.

6.5 CONSERVATION

warning!
All engines not in use are subject to rusting and corrosionof machined surfaces that are not protected with a paint coating. The degree of corrosion depends on meteoro logical changes and climatic conditions. The following recommendations are therefore of a general nature but they will help prevent orreduce the risk of damage due torusting

6.6 LONG INACTIVITY INSTRUCTIONS

When the engine is not to be used for a long period of time or during the winter time, certain operations must be carried out to keep it in perfect operationing condition. Follow these lay-up instructions carefully.

(1) Carefully clean the external surface of the engine.

(2) If very low temperatures are expected, always use liquid anti-freeze in the refrigeration circuit as indicated in section 4.2.2 of this manual.

(3) In the case of low-capacity fuel tanks, drain completely and clean; refill with a mixture of diesel oil and rust inhibitor oil. For diesel oil in large-capacity fuel tanks, it is enough to add 2% rust inhibitor oil.

(4) Close the sea-water cock. Connect a hose from the sea water pump to a open bucket. Put 30% anti-freeze mixture to the bucket. Start the engine for a moment. So the sea water system will be filled with anti-freeze mixture. Stop the engine.

(5) Use a dielectric spray on the electrical connections, disconnect the battery, and charge it several times during the period of inactivity.

6.7 RESTORATION OF THE RUNNING CONDITIONS

When starting up the engine again after winter lay-up, certain operations must be performed. Follow these steps:

(1) Fill the fuel tank with clean diesel oil. Carry out the process for checking the fuel filter. If the filter is clogged, replace the filter cartridge. The diesel oil-rust inhibitor oil mixture placed in the tank for winter lay-up can be used to operate the engine.

(2) Drain the rust inhibitor oil contained in the crankcase and refill the engine sump with oil according to the instructions on heading 4.2.1.1.

(3) Check the condition of the fresh-water cooling system rubber hoses.

(4) Reconnect the battery and apply a layer of neutral Vaseline to the battery terminals.

(5) Remove the nozzle supports and clean them. If possible, verify the setting of the nozzles at a workshop. Turn the engine without nozzles, using the starter motor, to eliminate the rust inhibitor oil used in the winter. Then install the clean nozzles.

(6) Connect the cooling and exhaust system. Open the sea-water cock.

(7) Verify whether there are any leaks in the fuel and water systems.

(8) Start up the engine and try out at different speeds, making sure that the water flows correctly. Check again to see if the connectors leak.

7. REPAIR AND MAINTENANCE

7.0 GENERAL WARNINGS

Refer to heading 1.3 for safety information.

7.1 TYPE AND FREQUENCY OF INSPECTIONSAND MAINTENANCE INTERVENTIONS

INCREASE THE FREQUENCY OFMAINTENANCE IN HARSH DUTYCONDITIONS. (FREQUENT STOPSAND STARTS, DUSTYSURROUNDINGS, PROLONGEDWINTER SEASON, NO-LOADRUNNING)

IF POSSIBLE CHECK LEVELS ANDREPLENISH SUPPLIES WITH THEENGINE STOPPED AND ATAMBIENT TEMPERATURE

WARNING!
RISK OF BURNS DURINGMAINTENANCE OPERATIONSCARRIED OUT WHEN THE ENGINEIS HOT. WEAR SUITABLE SAFETYCLOTHING
IT IS STRICTLY FORBIDDEN TOCLEAN THE ENGINE WITHCOMPRESSED AIR

IT IS STRICTLY FORBIDDEN TOPERFORM MAINTENANCE/CLEANING OPERATIONS IN THEPRESENCE OF MOVING PARTS

USE GLOVES, OVERALLS ETC. TOPROTECT THE BODY FROM BURNS

		Service interval					
	Inspection concept	**Daily**	**1ª 50 Hour**	**200 hour**	**400 hour**	**800 hour**	**2 years**
Engine	Screw tightening, fixing		✔		✔		
	Valve play				✔		
	Exhaust gases, noise and vibrations	✔					
	Compression pressure					✔	
Lubrication system	Engine oil (1)	✔	◆	◆			
	Gearbox oil (1)	✔	◆		◆		
	Oil filter		◆	◆			
Fuel system	Fuel	✔					
	Fuel tank						❒
	Fuel filter (engine)				◆		
	Decanting filter (if any)		◇		◆		
	Injection pump					✔	
	Injector					✔	
	Bleed fuel system						✔
Intake system	Air filter		✔		◆		
Cooling system	Cooling water	✔					◆
	Water filter	✔	❒	❒			
	Bottom cock	✔					
	Water pump impeller				✔	◆	

(1) Check the service manual

❒ Cleaning ✔ Inspection, adjustment or filling
◆ Change ◇ Drainage

		INTERVALOS					
	Inspection concept	**Daily**	**1ª 50 Hour**	**200 hour**	**400 hour**	**800 hour**	**2 years**
Electrical system	Every instrument	✔					
	Incandescent spark plug				✔		
	Alternator and starting motor				✔		
	Alternator belt and tension		✔		✔		
	Battery level		✔	✔		◆	
Exhaust Protections	Airvent, …		✔❒	✔❒	✔❒	✔❒	

❒ Cleaning ✔ Inspection, adjustment or filling
◆ Change ◇ Drainage

DAILY CHECKING BEFORE USE OF THE ENGINE
Check oil level in the engine and gearbox. Filling. Filling is not required if level is near to the rod upper line.
Check fuel level and open fuel delivery cock.
Open the water access cock.
Check indicators. After commisioning check oil pressure, water temperature and battery charge. The three lamps must be switched off and the alarm must not be sounded.
Check cooling water is flowing and if some failure is detected in the exhaust gases, noise and vibrations.
Check cooling water level.

AFTER THE FIRST 50 OPERATING HOURS
Change oil engine, gearbox and cover fuel supply pump.
Change oil filter.
Fuel decanting filter drainage (if equipped)
Control and eventual adjustment of the alternator belt.
Overhaul of the propeller shaft and positioning screw tightening torque.
Clean water filter for impurities.

EVERY 200 OPERATING HOURS
Change oil engine a.
Change oil filter.
Water filter cleaning.
Check battery level.

EVERY 400 OPERATING HOURS
Check the tightening torque of the engine positioning, propeller shaft screw and gas-oil piping nipples.
Adjust valve clearance.
Check incandescent spark plugs in case they might fused or it there is two connections.
Change air filter
Inspect injection pump.
Check condition of sea water pump impeller and its eventual replacement.
Check the alternator and starter.
Control and eventual adjustment of the alternator belt.
Change fuel filter.
Decanting filter component change (if equipped)
Gearbox oil change.

EVERY 800 OPERATING HOURS
Check the starting motor pinion and the flywheel toothed crown.
Change alternator belt.
Check the compression pressure of each cylinder.
Injector checking.

EVERY 2 OPERATING YEARS
Change the refrigeration anti-freeze liquid.
Clean the fuel tank.

EXHAUST PROTECCTIONS
Check the protections follwing the manufacturer comments. For the airvent, in case of blocked passages, disassemble the valves clean with freshwater, and spray with silicone before resembling the unit

7.2 OPERATING DESCRIPTION

(1) **Change engine and gearbox oil:**

See heading 4.2.1.

(2) **Change oil filter (Fig. 7.1):**

The oil filter is located under the air filter. Change the oil filter after the firsts 50 operating hours and afterwards every 200 hours. The oil filter being a cartridge type of easy handling shall not be cleaned. Change the oil filter cartridge by unscrewing it with a commercially available oil filter wrench. When fitting a fresh oil filter, smear as mall quantity of oil into the annular seal and firmly tighten it with the hand. When this operation is finished, start the engine and check oil is not leaking.

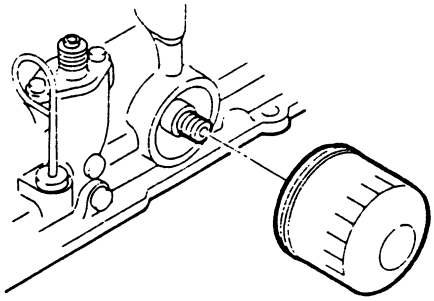

Fig. 7.1

(3) **Checking valve clearance:**

Perform this operation when the engine is cold in the following way;

With the rocking cover removed, loosen the rocker nut(1) and while the adjustment screw (2) is rotated, adjust the valve play with a gauge (3) (Fig. 7.2).

Intake valve play: 0.25 mm
Exhaust valve play: 0.25 mm

With piston nº 1 in the top dead centre of the compression cycle, adjust the play of the intake and exhaust valves of cylinder nº 1. Proceed similarly as with the other cylinders. The position of the BTDC can be confirmed with the a lining signs of the ditribution or timming cover and the crakshaft pulley.

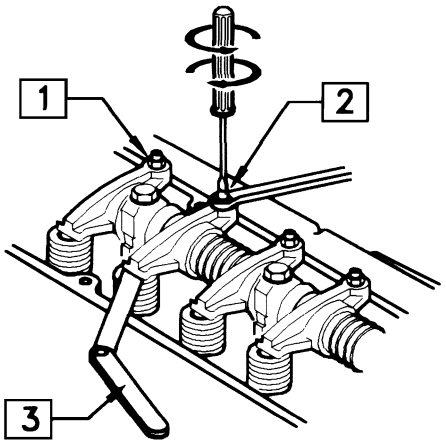

Fig. 7.2

After the adjustment, the rocking nut should be well tightened while the adjusting screw is locked so that it does not rotate.

NOTE: The adjustment of the valve play must be made after the cylinder head screws are again tightened.(Strictly comply with the operation sequence indicated in the heading 4.1)

(4) **Control and eventual adjustment of the alternator belt tension:**

Never adjust the belt tension with engine running.

An excessive tension may cause a quick wear of the belt and alternator bearings. Otherwise, if the belt is excessively loose or has oil, and insufficient load due to the belt skidding can be caused.

Check belt tension by pressing on one side with your thumb. Belt deflection should be about 1,1 cm (Fig.7.3).

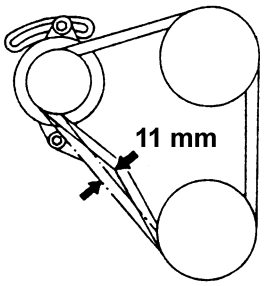

Fig. 7.3

(5) **Water filter cleaning:**

It is important to fit between the engine and the bottomcock a filter to avoid that any imputities existing in these a water might clog the cooling conducts.

Filter shall be cleaned every 200 hours by loosening the wing nut and removing the filtering component. Clean the filter and fit it again taking care the cover is well seated on the O-ring (Fig. 7.4). Then the engine is started to check if water is leaking from the cover.

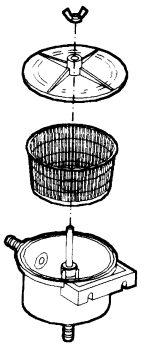

Fig. 7.4

(6) **Change cooling circuit water:**

Drain off all the circuit water by opening the two drain cocks, one in the exchanger an other in the cylinder block (Fig. 7.5). See the picture 7.5A for MINI-33/44/55 engines and the 7.5B, for MINI-17/26/29 engines.

When in cold climates, if the engine is not to be used for a long period, it is advisable to drain the water circuit.

Once this operation has been completed, close the drain cocks and fill to the hole in the tank cap (see heading 4.2.2 of this manual).

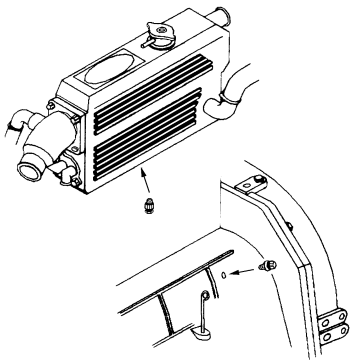

Fig. 7.5A

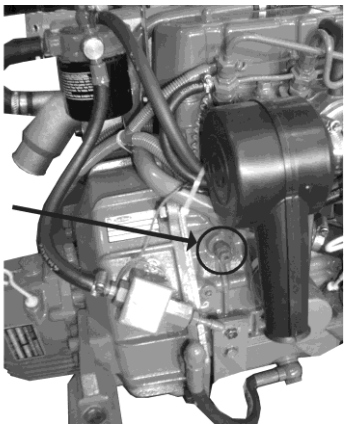

Fig.7.5B

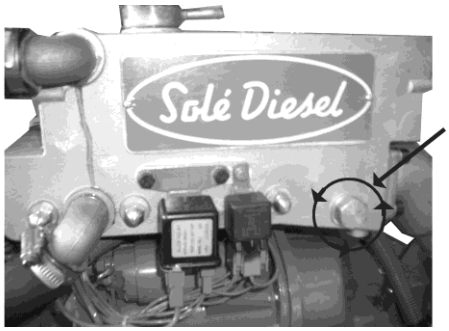

(7) **Checking battery electrolite level and charge:**
Batteries require a very careful handling and frequent checkings. Proceed as shown below:

(1) Always keep batteries dry and cleaned.
(2) Regularly check terminal cleanliness. If dust is settled, terminals should be loosened, cleaned and smeared witha neutral grease layer.
(3) Metal objects must not be placed over the battery.
(4) Batteries or containers containing acids should carefully be handled.
(5) Monthly or every 200 hours check the acid level and supplement it with DISTILLED WATER required. Level should not exceed the battery inside mark.
(6) Never use open flames to light battery components: there is explosion danger.
(7) In winter, batteries should be detached and placed following the manufacturer's instructions.

Before battery is charged with an external charger, disconnect both terminals.

(8) **Fuel decanting filter drainage (optional):**

Loosen the wing nut (3) (Fig. 7.6) located at the lower side of the glass vessel and let go all the acrued water. Shut again off the wing nut and check it does not drip.

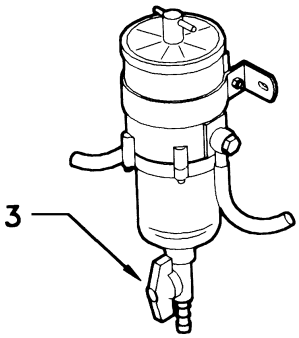

Fig. 7.6

(9) **Replace the fuel filter element (engine):**

The fuel filter is bladded and cannot be cleaned. It must be replaced at least once every 12 months.

To perform the filter change: Shut off the cock located at the tank delivery. Unscrew cover filter with a chain spanner. Screw the new filter to the cover with the hand and at the same time replace the rubber seals. Carry out the operations at heading 5.1.1 bleeding air from the fuel system.

(10) **Injector checking:**

This operation shall be made by a SOLÉ DIESEL service. If a hand-pump is available, monitor the calibration of injectors, by verifying that the pressures are those listed in paragraph 2.6 of this manual.

(11) **Checking incandescent spark plugs:**

Supply power to the glow plugs and make sure that they become incandescent, if not renew them.

(12) **Change air filter (MINI-17/26/2933/44 models):**

See the picture 7.7A. Engine is provided with an intake air filtering component. To perform such a change, slacken off the central filter clamp, remove the old filter, byre placing with a new one. The filter and element are an integral unit.

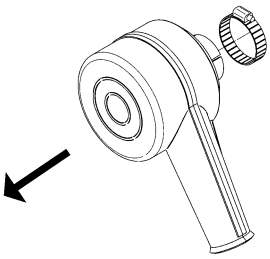

Fig. 7.7A

Change the conical air filter .

See picture 7.7B. Only for MINI-55 engine. The engine is equipped with an element air filter. To clean the air filter, slack the clamp, extract the filter and follow the instructions indicated for the producer. After, mount again the filter, tightening the clamp.

Change the filter following the producer instructions.

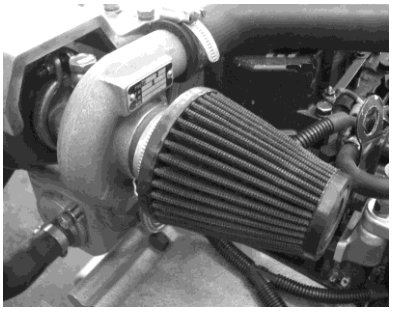

Fig. 7.7B

MINI55 air filter, cleaning instructions (use part no. 17710013):

First pre-cleaning the filter. Tap the filter to dislodge any loose dirt, then gently brush with a soft bristle brush. Use the spray cleaner liberally onto the filter media and left soak for 10 minutes. Large the filter can be rolled or soaked in a shallow pan of air filter cleaner. Then, remove immediately and let soak for approximately 10 minutes. Rinse off the cotton filter media with low-pressure tap water. Rising from the clean side to the dirty side. After rising, shake off all excess water, and dry naturally. The use of other cleaning or drying methods will damage the filter and void the air filter warranty. After filter is completely dry, oiling (using the spray or squeeze bottle) along each pleat, once only, holding nozzle 3 seconds away from filter media.

Carefully apply oil on any visible white spots and let sit for 20 minutes. Wipe the gasket or sealing surface with a clean cloth or paper towel to remove excess oil, prior to installation. DO NOT OVER-OIL AIR FILTER. Over-oiling may interfere with the proper performance of the engine and/or certain engine components.

(13) **Check condition of sea water pump impeller and its eventual replacement:**

Driving impeller is neoprene and cannot rotate dried. If operated without water, the impeller can be broken. It is important therefore that a spare impeller is always available.

To change the impeller, close water inlet cock, remove pump cover and with two screwdrivers prize it by removing the impeller from the shaft. Clean housing and replace with a new one. Fit cover by placing a new seal (Fig. 7.9). Open bottom cock. If the impeller is broken, when it is changed, be sure all the rubber residues scattered are removed from the water pipes.

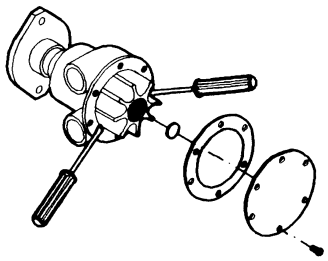

Fig. 7.8

(14) **Check alternator and starting motor:**

The engine has an alternator of 12V and 40 or 50 Amps, according to the model, with an electric regulator incorporated and an output for the revolutions counter.

Regularly check the electrical connections, its relevant positioning and the good terminal contact. For the starting motor, check brush wear and switch sour face roughness. Replace if the service limitation has been reached.

(15) **Cleaning the fuel tank:**

Drain out the contains of the fuel tank to remove condensate and any foreign materials. Wash the tank with fuel (dispose of fuel as described in heading 4.4.

(16) **Replace alternator belt:**

Fully detension old belt so that its removal can be made easily (Fig. 7.9).

When the belt is unfitted, check the condition of the pulley recesses, they shall be dry and clean. Its cleanliness is performed with soap water (never use petrol, gas oil or similar products).

Fit the belt taking care the belt insertion is made with the hand but without damaging it and if required pace it with a tool at least without any cutting edges since otherwise the belt could be damaged and its life shortened. The belt shall be tensioned such as is previously explained.

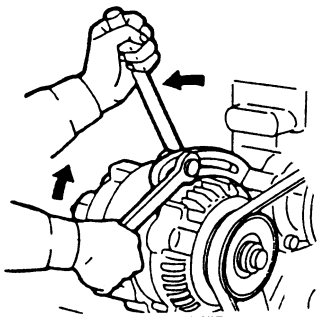

Fig. 7.9

(17) **Check the compression pressure of each cylinder:**

Check each cylinder with the glow plug removed using a compression pressure gauge. If measurement of any cylinder is below:

- 28 kg/cm^2 a 280 rpm (MINI-17/26/29)
- 30 kg/cm^2 a 240 rpm (MINI-33/44/55)

The cylinder must be repaired. Difference in pressure between cylinders must be within 2 kg/cm^2.

(18) **Inspect injection pump:**

The fuel injection pump is one of the most relevant components of a diesel engine and therefore its handling requires the best care. In addition, the injection pump has carefully been adjusted at factory and should never be adjusted carelesly. Such adjustment, whenever is required, shall be made by a SOLÉ DIESEL licensed service shop, since a precision pump monitor and skill knowledge are required.

The requirements for the handling of a fuel injection pump are the following: Always use fuel which is without impurities and fuel filter shall be changed at the scheduled time.

(19) **Fuse:**

The switchboard carries as protection a 2 fuses: one with a size 10A to protect the panel's instruments and other to protect the circuit. In case the switchboard does not received power supply check if the switchboard is fused or not and replaced it.

(20) **Checking and clearing turbo-charger.**

To extend turbocharger life and efficiency, some basically important instructions are given below

(1) Posible causes of turbo-charger trouble are essentially three:

(a) Lack of lubricant: causes bearing failure with consequent seizure of rotary components.

(b) Introduction of foreing matter: poor servicing of air cleaner will involve the introduction of solid particles which will damage the compressor-impeller blades. Fragments would be carried to the cylinders.
(c) Lubricant contamination: this causes scoring of journal bearings, clogs oil passages, wears the seals, with consequent leakages and seizdures.

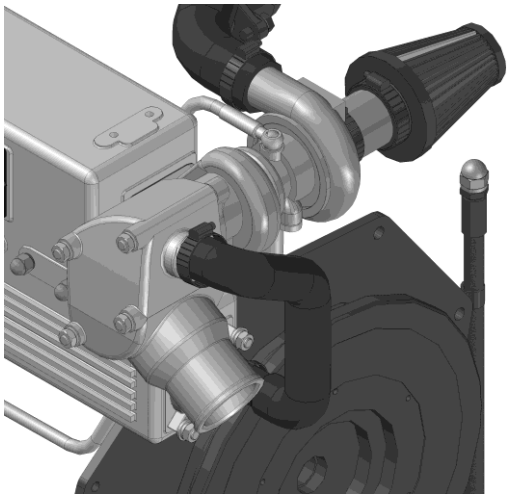

Fig. 7.10

(2) Turbocharger construction simplicity is only apparent: in fact many of its parts are machined to 1/1000 mm tolerances. Its therefore recommended that you entrust any servicing to skilled personnel having availability of special equipement provided by the service network.

(3) Preventive maintenance will extend the life and efficiency of the turbocharges. Should you notice loss of lubricant, vibrations or abnormal noises, stop engine immediatelly. Timely servicing will avoid costly and unexpected repairs.

(4) When the turbocharger is not working properly or for preventive overhaul proceed as follows:

(a) Remove turbocharger from the engine.
(b) Disassemble aluminium body enclosing main motor.
(c) Immerse complete assy in petrol (gasoline) untill all dirt is dissolved.
(d) Assist through cleaning by using a plastic brush or scraper.
(e) Wipe and dry in air making sure that the oil ducts are perfectly clean. It is better not to use steam which might damage the bearings and the shaft.
(f) Make sure that the intake filter is perfectly clean.
NOTE: Every time turbocharger is disassembled and before starting it, make sure to prime it with engine oil to prevent damage due to dry running.

⚠ Warning
For better lubrication of the turbocharger we advice to let the engine run at idling speed without load during 30 seconds after starting and 3 minutes before stopping

7.3 TROUBLE SHOOTINGS

ENGINE FAILURE	PROBABLES CAUSES
FAILURE TO START	C1 – C2 – C3 – C4 – C5 – C6 – C9 – E1 – E2 – E3 – E4 – E5 M3 – R1 – R3 – L4
STARTS THEN STOPS	C1 – C3 – C5 – C7 – C9 – M5 – R4 – R6
POOR ACCELERATION	C1 - C2 – C3 – C4 – M1 – M2 – M4 – R7
UNEVEN RUNNING SPEED	C4 – L2 – R4 – M1
BLACK SMOKE	C3 – C6 – C7 – M1 – M4 – R1 – R2
BLUE SMOKE	L2 – M5 – R1 – R5 – R6 – R7
ENGINE OVER-HEATING	L1 – L4 – L6 – CR2 – CR3 – CR4 – CR5 – CR6 – M2 – M3 – M4
LOW OIL PRESSURE	L1 – L3 - L5 – L6 – L7 – L8 – R5
NOISY ENGINE	M3 – R5 – R7
OIL PRESSURE TOO HIGH	L3 – L7
LOW POWER	C3 – C6 – C8 – M1 – M7 – R2 –R7
BATTERY CHARGE DEFECTIVE	E1 – E2 – E7 – M6
GEAR DO NOT MESH CORRECTLY	M8 – M9

FUEL SYSTEM	
FAULTY OR CLOGGED FUEL PUMP	C1
OBSTRUCTED FUEL LINES	C2
FUEL FILTER CLOGGED	C3
FAULTY INJECTION PUMP	C4
AIR IN FUEL SYSTEM	C5
INJECTORS NOT SET CORRECTLY OR SEIZED	C6
INJECTION PUMP INCORRECTLY SET	C7
WATER IN FUEL SYSTEM	C8
FUEL OUTLET COCK CLOSED	C9

LUBRICATION	
FAULTY OIL PUMP	L1
OIL LEVEL TOO HIGH	L2
OIL PRESSURE RELIEF VALVE STICKING	L3
OIL VISCOSITY TOO HIGH	L4
OIL VISCOSITY TOO LOW	L5
OIL LEVEL TOO LOW	L6
FAULTY OIL PRESSURE VALVE	L7
FAULTY OIL PRESSURE GAUGE OR SWITCH	L8
OIL SUCTION LINES CLOGGED OR UNIONS LOOSE	L9

ELECTRICAL SYSTEM	
BATTERY DISCHARGED	E1
LOOSEN CABLE CONNECTION	E2
FAULTY STARTING SWITCH	E3
FAULTY STARTER MOTOR	E4
FUSE BURNED OUT	E5
FAULTY SPARK PLUGS	E6
FAULTY ALTERNATOR REGULATOR	E7

COOLING CIRCUIT	
SHORTAGE OF WATER IN FRESH WATER CIRCUIT	CR1
FAULTY FRESH WATER PUMP	CR2
BOTTOM COCK TO WATER FILTER CLOGGED	CR3
FAULTY SALT WATER PUMP	CR4
WATER COOLER CLOGGED	CR5
FAULTY THERMOSTAT	CR6

MAINTENANCE	
CLOGGED AIR FILTER	M1
ENGINE OVERLOADED	M2
TIMING TOO ADVANCED	M3
TIMING TOO RETARDED	M4
LOW IDLE SPEED	M5
ALTERNATOR BELT TENSION	M6
EXHAUST BACKFIRES	M7
REMOTE SHIFT AND REVERSING GEAR CONTROL OUT OF ADJUSTMENT	M8
CLUTCH CONE WORN	M9

REPAIRS	
WORN OR STUCK RINGS	R1
POOR VALVE SEALING	R2
STUCK VALVE	R3
GOVERNOR SPRING BROKEN OR WRONG SPRING	R4
WORN CON. RODS/OR MAIN BEARINGS	R5
WORN CYLINDERS	R6
WRONG VALVE CLEARANCE	R7

8. ADDITIONAL INSTRUCTIONS

8.0 ADDITIONAL INSTRUCTIONS

Refer to heading 1.3 for safety information

8.1 INSTRUCTIONS FOR DECOMMISSIONING, SCRAPPING AND DISPOSAL

When you decide to decommission the engine, please contact SOLÉ S.A., we will provide you with the relevant instructions in relation to the laws in force at the time. When scrapping the entire engine or components of the engine, observe the LAWS IN FORCE IN THECOUNTRY OF INSTALLATION.

For information on the materials of which individual components of the engine are made, contact SOLÉ S.A.

8.2 DERATING OF ENGINE DUE TO FUEL AND COMBUSTION PROPERTIES

FUEL PROPERTIES - Output correction due to fuel properties.
Specified outputs presuppose the following fuel properties (as per ISO 3046):

Energy value:	42700 kJ/kg
Temperature, before feed pump:	35ºC
Density: (15ºC)	0.84 kg/dm^3

If the fuel derivates from these values, correction factors (in %) are found in the graphs below. Use the correction factors in "calculation of engine output"

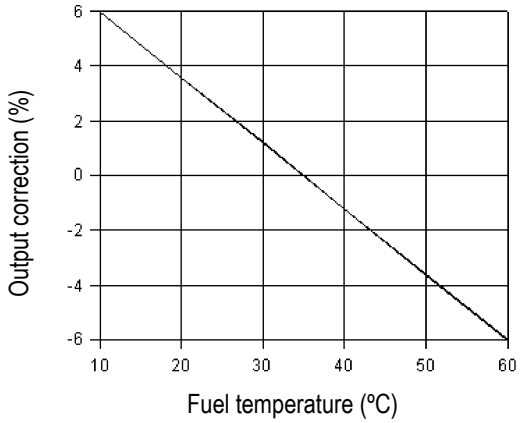

Graph 1
Effect of fuel temperature on engine output. +35ºC is reference temperature (0%)

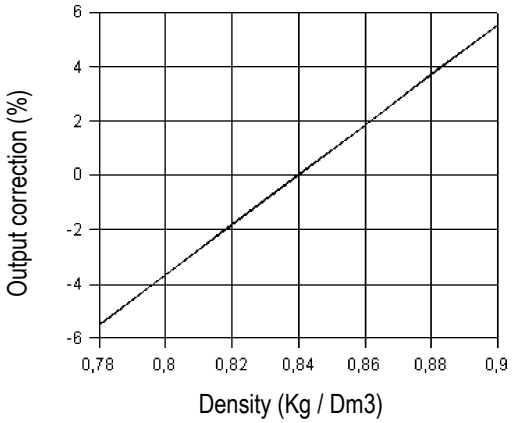

Graph 2
Effect of fuel density on engine output. Normal value is 0.84 Kg/dm3 at +15ºC (0%)

AIR PROPERTIES - Output correction due to air properties.
Specified outputs presuppose the following air properties (as per ISO 3046):

Air pressure:	1000 mbar (750 mmHg)
Air temperature:	25ºC
Humidity:	30%

If the air deviates from these values, correction factors (in %) are found in the graphs below. Use the correction factors in "calculation of engine output"

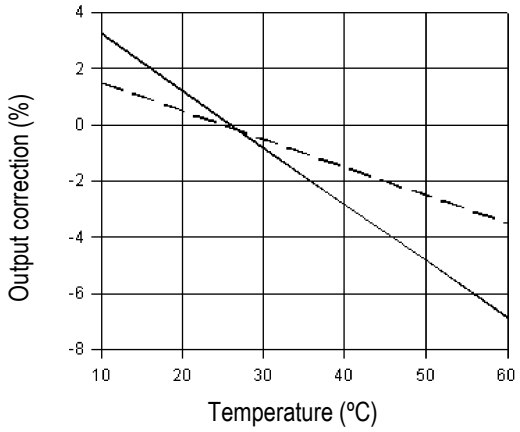

Graph 3
Effect of intake air temperature on engine output.
+25ºCis reference temperature (0%).

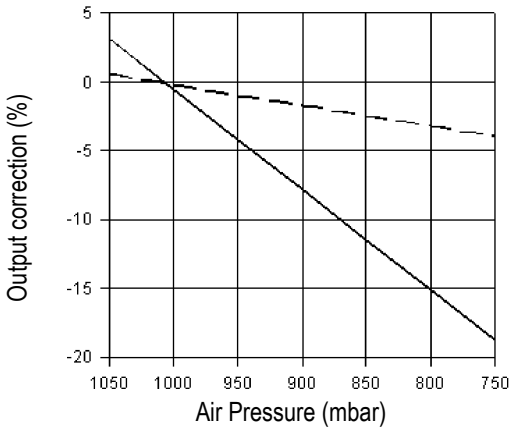

Graph 4
Effect of air pressure on engine output. Normal value is1000 mbar (750 mm Hg) (0%).

——— NORMALLY ASPIRATED

- - - - - TURBOCHARGED

9. SOLÉ DIESEL WARRANTY

Read the manual and documents delivered with each engine before carrying out any of the operations or presenting any queries. The engine is supplied without any liquids. Ensure that the liquids used match the specifications contained in Solé Diesel manuals.

The application of the conditions described in this document shall only be effective for engines or generator sets that have been invoiced after January 1, 2012.

9.0 SOLÉ DIESEL LIMITED WARRANTY

Solé Diesel guarantees that at the time of shipment all its engines and generator sets comply with the provided specifications and do not have any manufacturing defects.

The limited warranty provided by Solé Diesel enters into force from the time of sale to the firs end-purchaser or user of the engine or generator ser. In the event that the product is not immediately delivered to the end-customer, the warranty shall enter into force 6 months after the date of sale. Any limited warranty period that has not elapsed can be transferred to the following purchaser (s).

Unless authorised otherwise by Solé Diesel, the warranty periods are applied according to the time elapsed in months from the date of purchase or the limit of hours of operation (whichever occurs first) listed in the following table:

Limited Warranty Coverage Periods				
Product	Pleasure		Work	
	Months	Hours	Months	Hours
Propulsion Engines	24	1000	12	2000
Generator Sets	24	1000	12	1000

9.1 SOLÉ DIESEL EXTENDED WARRANTY

Solé Diesel an extended period of coverage for the following components: engine block, cylinder head, crankshaft, camshaft, flywheel housing, timing gear housing, timing gear, conrod.

Extended Coverage Periods				
Product	Pleasure		Work	
	Months	Hours	Months	Hours
Propulsion Engines	36	1500	-	-
Generator Sets	36	1000	-	-

9.2 RESTRICTIONS:

Coverage:

a) The warranty covers any failure of the product under normal opera- ting conditions caused by a defect in manufacturing.
b) The warranty covers the labour costs necessary to replace and/or repair the defective original components, according to Solé Diesel standards of excellence. The time period covered for these operatio- ns is limited to 4 hours.
c) The warranty covers reasonable costs of travel required to carry out the necessary operations. The travel distance is limited to 300 kilome- tres in conjunction to a travel time of 3 hours.

Excluded from coverage:

a) If Solé Diesel products are installed and used alongside other products not designed or manufactured by Solé Diesel that affect their operation, the warranty shall apply exclusively to the Solé Diesel products and shall not apply if the products

from another manufacturer are inappropriate for use alongside Solé Diesel products or are the cause of the failure or poor operation of our products.

b) The warranty shall not apply if the revisions and maintenance services indicated in the User and Maintenance Manuals have not been adhered to properly. In case of implemented warranty, supporting document of the revisions and maintenance service should be exhibited, proving the requirements outlined in the manuals have been followed.
c) Deterioration resulting from time of storage exceeding 6 months and/or storage conditions that do not comply with the procedures described in the User and Maintenance Manuals.
d) Deterioration resulting from not complying with the procedure for winter storage while the engine is not in service, as described in the User and Maintenance Manuals.
e) Faults due to negligence, lack of service, accidents, abnormal use and inadequate service or installation.
f) Faults due to the use of components not manufactured or sold by Solé Diesel.
g) Faults due to electrical installations that do not comply with Solé Diesel design specifications or are not expressly approved by Solé Diesel.
h) Faults due to the use of and operation with fuels, oils or lubricants that are not authorised by Solé Diesel.
i) Faults due to water entering the cylinder(s) through the exhaust system.
j) Faults in propulsion engines due to the use of a propeller that is inadequate for the load or application. We recommend contacting Solé Diesel to consult the choice of the correct propeller(s).
k) Failure for general omission of the procedures described in the User and Maintenance Manuals.
l) Components subjected to normal operating wear and tear.
m) Costs due to phone communications, loss of time or money, discomfort, launching, grounding, removal or replacement of vessel parts or materials because the design of the vessel makes it neces- sary to do so to access the engine, and damage and/or accidents caused as a result of a failure.

9.3 RESPONSIBILITIES:

Responsibilities of the manufacturer:

The obligations of Solé Diesel are restricted to repairing the defecti- ve parts or, IF DEEMED APPROPRIATE BY SOLÉ DIESEL, returning the amount of the purchase or replacing the parts to prevent poor operation resulting from defective materials or faults in the manu-facture covered by the warranty.
Solé Diesel reserves the right to modify the design of any of its products without taking on any obligation to modify a product that has been manufactured previously.
This manual, as well as technical documentation, manuals or pamphlets may undergo modifications without prior notice.

Responsibilities of the purchaser:

The purchaser shall be responsible for the care, operation and maintenance of the product in compliance with the contents of the User and Maintenance Manuals. The purchaser shall provide proof of all the maintenance services performed on the product. The costs of said services and that of the components and liquids replaced during said services shall be at the expense of the purchaser.
The maintenance operations described in this manual shall be performed during the Warranty Contract Periods (Limited and Extended Coverage) by an AUTHORISED SOLÉ DIESEL DEALER. Non-compliance with this condition shall void the warranty in all its terms. In such an event, the materials (oil, filters, etc.) and labour involved shall be at the expense of the purchaser. The purchaser should keep the invoice of the work performed as proof.
If the service is not covered by the warranty, the purchaser must pay for all labour performed, the associated materials and any other expense related to the service.
All shipments of products or components sent by the purchaser for inspection and repair shall be paid in advance by the purchaser.

9.4 AFTER-SALES SERVICE CONTACT:

Claims shall be presented during the warranty period to the nearest authorised Solé Diesel dealer (see chart of Solé Diesel Dealers), who shall take care the service covered by the warranty.

The purchaser must provide proof of purchase and date of purchase by presenting the authorised dealer with an original copy of the Warranty Registry Card. If this is not available, the purchaser must provide a copy of the purchase invoice of the product in question. Claims under warranty shall not be dealt with by the dealer until the date of purchase has been verified.

The following information must also be provided by the purchaser:

a) Owner's name, address and contact telephone number.
b) Product model and serial number.
c)Number of service hours of the product.
d) Detailed description of the problem.
e) Information regarding any repair or installation performed by a service not included in the Solé Diesel distribution network, as well as the services performed.

SERVICE ASSISTANCE:

For an updated list of our distribution network, visit Dealers section in our web page www.solediesel.com.

Or request this information by contacting Solé Diesel at:

e-mail: info@solediesel.com
Phone: +34 93 775 14 00

10. TECHNICAL ANNEXES

10.0 OIL SPECIFICATIONS

10.0.1 ENGINE OIL TO BE USED

Use Sole Diesel SAE 15W/40 oil. Its service classification is as follows: as follows:

OIL VISCOSITY:

Select oil viscosity most suitable for the atmospheric temperatures on which the engine should be operated. Its recommended to use Sole Diesel SAE 15W/40 oil in all the seasons due to the minimum change in its viscosity with the temperature changes. This is an all-season oil for temperatures ranging between -15ºC and +35ºC

API CE/CF-4/SG
MIL-L-2104 E
CCMC D4/G4/P

10.0.2 GEARBOX OIL

For mechanical geared RONIM-V and SMI-R2 and SMI-R3 gearboxes, it is recommended to use the same type of oil that is used in the engine, a Sole Diesel SAE 15W/ 40, excepting the following models indicated in the table below.

Attention!
Different gearboxes of type RONIM-V, SMI-R2 and SMI-R3 exist, in which it is necessary to use oil type ATF. Gearboxes type SMIR3, use oil type ATF. These new units are identified with a red label near the oil level stick.

Label details:

From serial number indicated in the following table and up, gearboxes require use of automatic transmission oil type ATF (NOT SUPPLIED BY SOLÉ S.A.) For another gearboxes, we recommended use the oil that the manufacturer recommends. Read the delivered documentación

ENGINE TYPE	GEARBOX TYPE	RATIO	SERIAL NUMBER
MINI 17 / 26	RONIM V	2.28 : 1	≥225.13.02400
MINI 17 / 26	RONIM V	3.05 : 1	≥225.15.00300
MINI 33	RONIM V	2.28 : 1	≥225.13.10700

ENGINE TYPE	GEARBOX TYPE	RATIO	SERIAL NUMBER
MINI 33	SMI R2	3 : 1	≥ 256.155.xxxx
MINI 44	SMI R2	3 : 1	≥ 256.155.xxxx

ENGINE TYPE	GEARBOX TYPE	RATIO	SERIAL NUMBER
MINI 33	SMI R3	2 : 1	≥ 257.1x.xxxx
MINI 33	SMI R3	2.5 : 1	≥ 257.1x.xxxx
MINI 44	SMI R3	2 : 1	≥ 257.1x.xxxx
MINI 44	SMI R3	2.5 : 1	≥ 257.1x.xxxx

If the engine fitted a diferent gearbox listed in the table, read the other gearbox specific gearbox manual attached.

10.1 ESPECIFICATIONS FOR ENGINE INSTALLATION

ENGINE	AIR ADMISSION DISPLACEMENT (1)	ØINT EXHAUST HOSE (2)	BATTERY (12V)	CABLE TO BATTERY LENGTH (m)	MINIMAL SECTION CABLE TO BATERRY	Ø INT. FUEL HOSE FROM TANK TO PRIMING PUMP (mm) (3)	Ø INT. FUEL HOSE FROM INJECTION PUMP TO THE TANK (mm)
MINI-17	**55 – 60 m³/h**	**40**	**60 A**	**≤ 1.5**	**50 mm²**	**8**	**5**
MINI-26	**80 – 90 m³/h**	**40**	**60 A**	**≤ 1.5**	**50 mm²**	**8**	**5**
MINI-29	**80 – 90 m³/h**	**50**	**80 A**	**≤ 1.5**	**50 mm²**	**8**	**5**
MINI-33	**125 – 130 m³/h**	**50**	**80 A**	**≤ 1.5**	**50 mm²**	**8**	**5**
MINI-44	**145 – 155 m³/h**	**50**	**80 A**	**≤ 1.5**	**50 mm²**	**8**	**5**
MINI-55	**192 m³/h**	**60**	**80 A**	**≤ 1.5**	**50 mm²**	**8**	**5**

(1) Max. r.p.m.
(2) for each curve of 90º of the installation, must increase 10 mm (for lengths superiors to 3m)
(3) Available from January 2007. Check the electric/mechanical fuel pump. Before January 2007, the Ø hose was Ø6mm.

10.2 OIL DIPSTICK MODIFICATION WHEN THE ENGINE IS FITTED INCLINED.

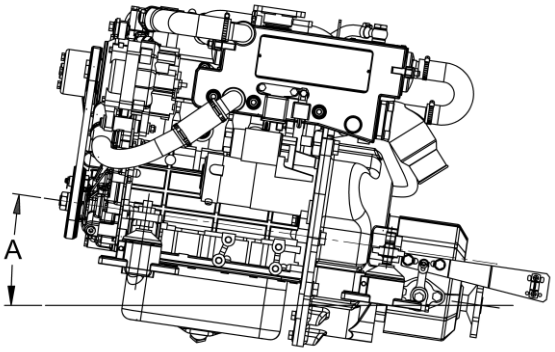

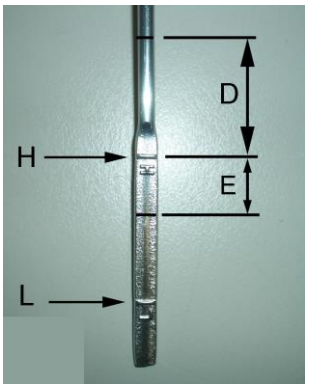

When the engine is fitted inclined, the oil dipstick must be modified to avoid problems of aspiration by the oil pump. See the table enclosed for modification level in rod oil. Increase level D or decrease the level E, starting off of level H of the original oil dipstick.

A ENGINE INCLINATION	D (MINI-17)	E (MINI-26/29)	D (MINI-33)	D (MINI-44)	D (MINI-55)
4º	0 mm	0 mm	7.6 mm	3 mm	3 mm
8º	1.5 mm	2 mm	14 mm	6.3 mm	6.3 mm
12º	3 mm	4 mm	21.5 mm	8.7 mm	8.7 mm
16º	3.5 mm	6 mm	28.7 mm	9.5 mm	9.5 mm
20º	5 mm	8 mm	37.2 mm	13 mm	13 mm

10.3 FUEL INJECTION TIMING (BTDC)

The BTDC are diferent depending the serial number engine. Please, contact to SOLE.

	ENGINE, PART no.					
BTDC	**MINI-17**	**MINI-26**	**MINI-29**	**MINI-33**	**MINI-44**	**MINI-55**
14º	----	---	---	---	---	177.20.000
17º	138.20.000.1	139.20.000.1	---	172.20.000.1	173.20.000.1	---
19º	138.20.000	139.20.000	176.20.000	172.20.000	173.20.000	---

11.3 MAINTENANCE LOG.

11. INSPECTION PRIOR TO THE DELIVERY OF PROPULSION ENGINES

INSPECTION PRIOR TO THE DELIVERY OF PROPULSION ENGINES

Installer / Marina information	
Installer Company:	Installation Date:
Contact Tel. no.:	E-mail:

Owner's Information	
Name and surnames:	
Contact Tel. no.:	Email:

Ingine Information	
Engine model:	
Engine serial number:	Gearbox / Saildrive serial nº.:

Installation Information		
Machine chamber operating temperature:		ºC
Angle of the engine (boat moored):		º
Maximum angle of the engine (navigation conditions):		º
Is the wet exhaust ebow above or below the floating line?	above	below

Propulsion Line Information					
Boat model:			Gearbox / Saildrive transmission ratio:		
Shaft diameter:	mm		Shaft length:		mm
Propeller diameter:	mm/inches	Propeller pitch:		mm/inches	Nº. Of propeller blades:

Exhaus, Cooling and Fuel Line Information			
Int. Diameter of exhaust hose:	mm	Int. Diameter of sea water intake to the pump:	mm
Int. Diameter of diesel intake:	mm		
Int. Diameter of diesel return intake:	mm		
Has an exhaust collector been installed?	YES / NO	Has an air trap been installed?	YES / NO

Verifications Prior to Start-Up	V/x	Notes
Correct engine alignment.		
Electrical installation connections		
Engine oil level		
Gearbox oil level.		
Coolant level and concentration		
Control lever operation		
Transmissions belts and belt tension		
Airtight sea water cock.		

Verification of Engine No-Load Operations	V/x	Notes
Unusual noises from the transmission		
Oil pressure		
Bleed the fresh water cooling system		
Verify the instrument panel: normal indications and alarm operation.		
Water, oil and fuel leaks in the engine or transmission.		

INSPECTION PRIOR TO THE DELIVERY OF PROPULSION ENGINES

Verification of Motor Operating with Propeller Load	V/x	Notes
Verify maximum engine rpm at full load and with forward gear clutched. This test should be performed with the engine heated up. (If top rpm is not achieved contact Solé to inspect propeller dimensions)	rpm	
Engine rpm with engine idling and clutch out	rpm	
Engine output and inverter operation. Verify operation of the Trolling valve, if applicable.		
Engine temperature and oil pressure.		

Information for the Owner	V/x	Notes
Delivery of the instrucions manual and engine-related documents.		
Review of the engine instrucions manual		
Study the instruments panel functions and the engine control functions.		
Report the first revision date.		
Report the maintenance schedule indicated in the manuals.		

12. MAINTENANCE LOG

DATE	HOURS	DESCRIPTION	SERVICE NAME

MARINE DIESEL ENGINES

SOLÉ S.A.

Oficina Técnica
Ctra. Martorell a Gelida km. 2 (C-243b)
08760 Martorell
Barcelona - Spain

Tel. (+34) 93 775 14 00
Fax. (+34) 93 775 30 13

e-mail: sole@solediesel.com
www.solediesel.com

Ref. 03917700.EN
Rev. 4