U125S Dimensions

Bravo One X Diesel

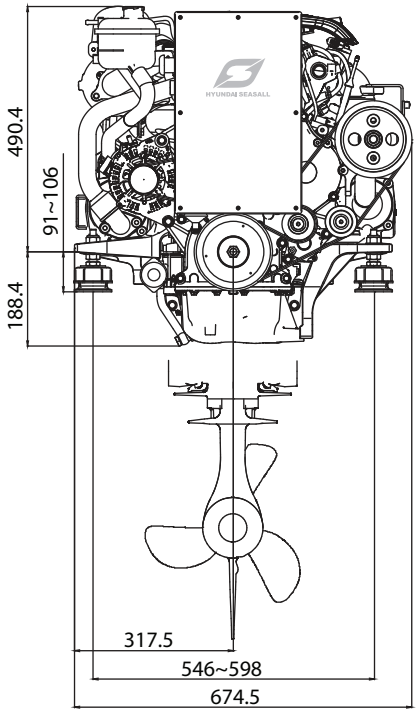

Front view

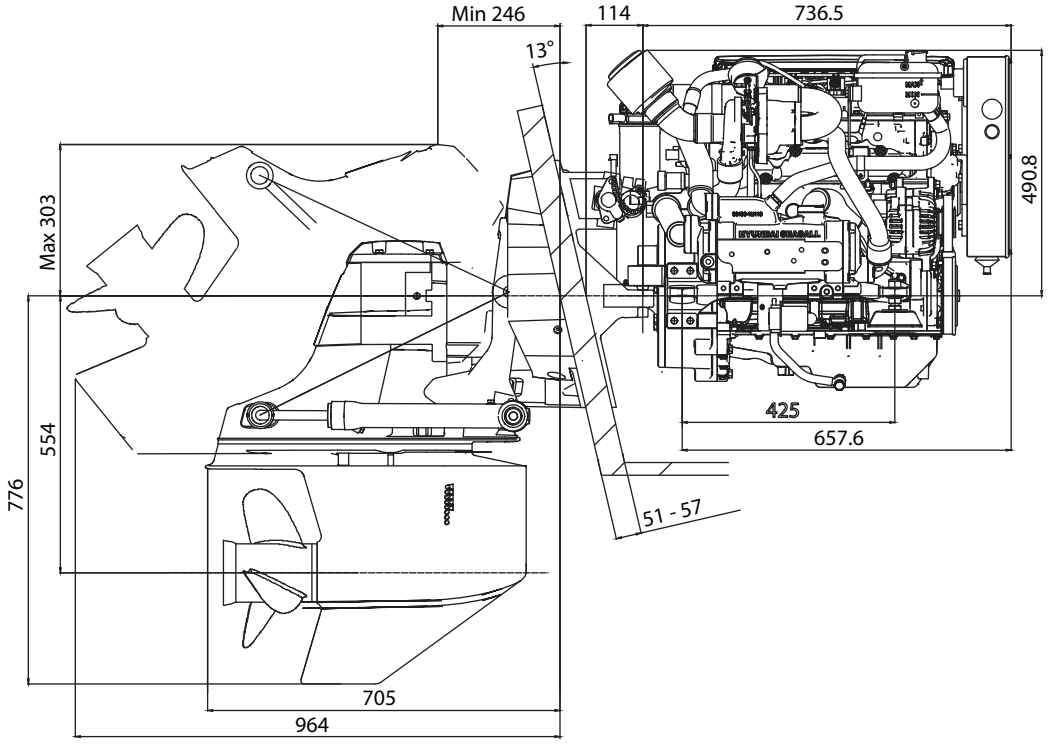

Side view

Projection 1st Angle